OBEN SEIN

experience the difference

PRODUCT CATALOGUE

HEAVY-DUTY AND INDUSTRIAL APPLICATION

MEFA

OBEN SEIN
experience the difference
WELCOME ON TOP
OUTSTANDING PRODUCTS
AND UNIQUE SERVICE
MEFA

OBEN SEIN with MEFA

MEFA is recognized by its customers and suppliers as **reliable** and solid partner, offering a sophisticated and practice oriented product portfolio. **Outstanding**, flexible product solutions as well as sustained reliability of people and operations in MEFA guarantee durable adding value.

This promise we summarize in our claim „**OBEN** SEIN".

COMPLETE **PRODUCT RANGE**

Extensive fastening solutions for HVAC and heavy-duty pipeline construction.

- From a wide range of pipe clamps for various applications, complex fastening systems for sanitary-, heating-, cooling-, and air-conditioning engineering, to CENTUM® heavy-duty program for industrial application
- In-house production facilities combined with comprehensive logistics providing the basis for optimal product availability and unique, customized solutions

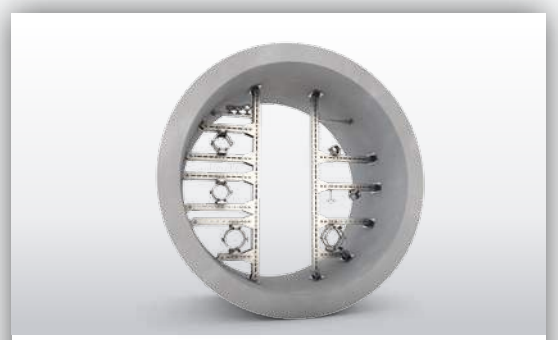

UNIQUE **CUSTOMIZED SOLUTIONS**

Design and realization of technical solutions out of norms – a characteristic of MEFA.

- Manufacturing of product and system solutions for all applications
- Development and production of customized products and solutions

SUPPORTIVE **PLANNING**

Our experienced specialists support the entire scope of planning.

- Admission of data and generation of technical solutions, also on site
- Design of pipeline and air duct alignment, fixpoint calculation

TIME-SAVING
PREFABRICATION

We ensure functionality of components and provide most efficient dimensioning of prefabricated structural components.

- No oversizing
- Planning reliability due to coordinated in time logistics
- Reduction of set-up time
- Definite designation and separate packaging units

RELIABLE
LOGISTICS

Receipt of the goods at the right place and moment.

- Delivery of all goods including C-profile channels by truck, sea- or airfreight
- Express delivery by courier or MEFA logistic service

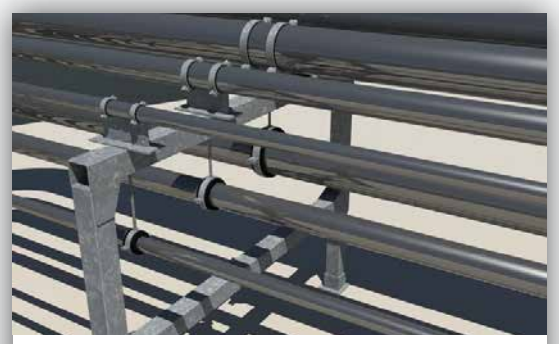

EFFICIENT
SOFTWARE SOLUTIONS

To support our customers we do offer - in addition to design and calculation services – load calculation software and product libraries.

- Static load calculations with MEFA statiCAL
- Extensive product libraries / CAD tools: MEFA ProfiDesigner, TRICAD MS®, PDMS- and E3D catalogue

INNOVATIVE:
ENERGY SYSTEMS

Systems for heating & cooling of housing and commercial buildings, new constructions and reconstructions.

- Utilization of regenerative energy sources such as sun, wind, rain, ice, geothermal energy, groundwater and process heat
- Combination with heat pumps and low-temperature heating systems
- Cost-effective, environment-friendly, customized

» MEFA Befestigungs- und Montagesysteme GmbH

MEFA-Germany:
Schillerstraße 15 | D-74635 Kupferzell
Postfach 51 | D-74633 Kupferzell

Phone +49 7944 64-0
Fax +49 7944 64-37
info@mefa.de | www.mefa.de

Production/logistics:
Kubacher Straße 2
D-74635 Kupferzell

Place of business: Kupferzell
Register court: Stuttgart, HRB 580899
Managing directors: Alexander Schmidt, Martin Schneider

» MEFA-International branches

Italy:
MEFA Italia SpA
Via G. B. Morgagni 16/B
I - 20010 Pogliano Milanese (MI)
Phone +39-02-935 401 95
Fax: +39-02-935 432 08
info@mefaitalia.com
www.mefaitalia.com

Poland:
MEFA-Polska Sp. z o. o.
ul. Sloneczna 52 G
PL - 05-500 Stara Iwiczna
Phone +48-22-737 209 0
Fax: +48-22-737 208 9
poczta@mefa-polska.com.pl
www.mefa-polska.com.pl

Hungary:
MEFA-Promt Hungária Kft
Szentlászlói u. 160
H - 2000 Szentendre
Phone +36-06-26-300 499
Fax: +36-06-26-311 634
info@mefahungaria.hu
www.mefahungaria.hu

Denmark:
MEFA Nordic A/S
Nyholmsvej 11
DK - 8930 Randers NO
Phone +45-879-150 00
Fax: +45-879-150 01
mail@mefanordic.dk
www.mefanordic.dk

Baltic states:
SIA MEFA Baltic
Gaujas iela 3
LV-1026 Rìga, Latvija
Phone: +371 67869536
Fax: +371 67869536
info@mefabaltic.com
www.mefabaltic.com

Spain:
MEFA Iberia, S.L.U.
Empleo nº 10
ES - 28906 Getafe (Madrid)
Phone: +34 910 524 783
info@mefa.es

» Please notice!

Technical-, range- and price changes reserved.
No accountability for mistakes on printing.

» General Terms and Conditions of Sale

Please visit our website www.mefa.de

INDEX

CENTUM® 01

SLIDING SLEDGES 02

PIPE CLAMPS 03

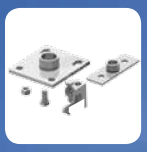

WORKING ACCESSORIES 04

MOUNTING EXAMPLES 05

PLANNING SUPPORT 06

TSP® - TOP-SURFACE-PROTECTION 07

CERTIFICATION 08

CENTUM® - The answer for heavy-duty application!

CENTUM® is the perfect solution for heavy-duty piping and industrial application.

Especially designed to admit high loads, reliable and economically. Thanks to a minimum of system components, a clear and simple screw connection system, CENTUM® offers decisive advantages compared to common welded steel constructions.

The major advantages of CENTUM®:

- Saving time and labour costs
- Stepless positioning of system components
- Unique, shape-fitting screw connection system with a max. load capacity up to 10 kN per connection
- Dismantlement at any time
- Compatible interface for MEFA-profile channels
- All parts are hot-dip galvanized or zinc-nickel coated
- Closed profile geometric for max. torsion stiffness
- A well thought-out range of system components offering a maximum of possible variants in construction

Top-Surface-Protection (TSP®)

The optimal solution for outstanding requirements. TSP® offers surface protection for all operational areas from C3 up to C5 (survey on page 1/34).

Approval/ calculation possibilities:	• RAL-GZ-655-B+C+D+E • DIN EN 13480-3 • DIN 1090-2 (CE) • DIN EN 1998-4 (Seismic) • DIN EN ISO 9001 • DIN EN 1993

CENTUM® - components list

01

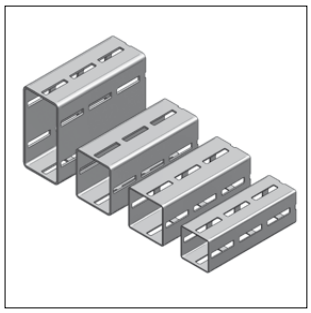

CENTUM Square profile
Page 1/4

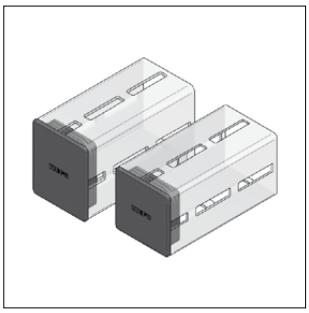

CENTUM Protecting caps
Page 1/5

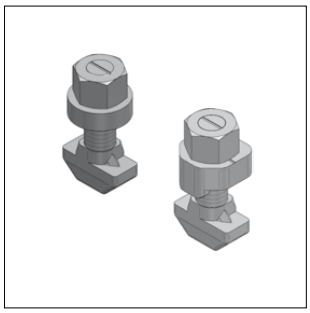

CENTUM Connection system
Page 1/6

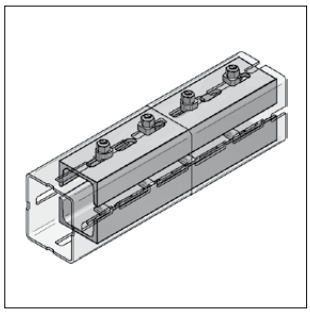

CENTUM Connector
Page 1/7

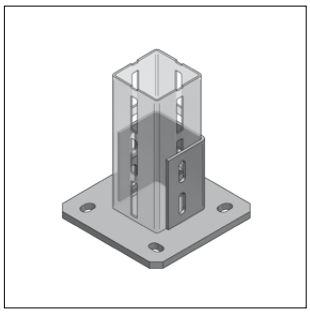

CENTUM Holder
Page 1/8

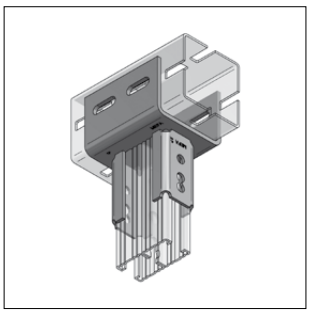

CENTUM Adaptor
Page 1/9

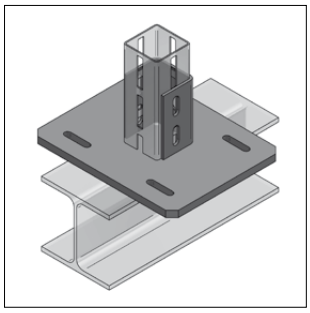

CENTUM Girder fixation
Page 1/10

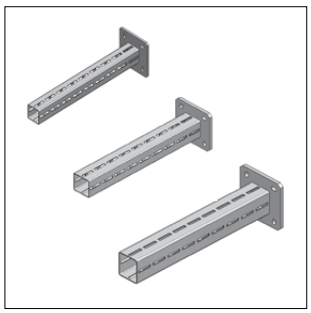

CENTUM Consoles
Page 1/11

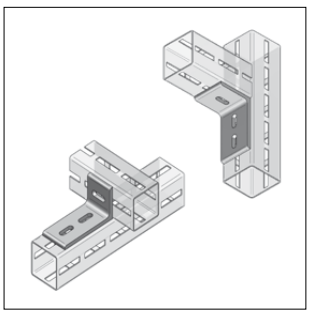

CENTUM Angles
Page 1/12

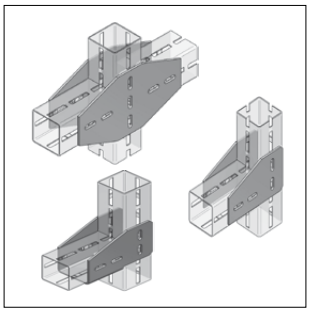

CENTUM Angle-shoe,
CENTUM Plates
Page 1/13

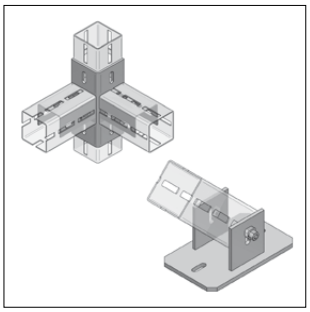

CENTUM Angle coupler,
CENTUM Joint holder
Page 1/15

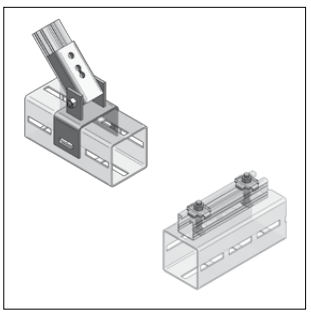

CENTUM Joint connection,
C-profile connector
Page 1/16

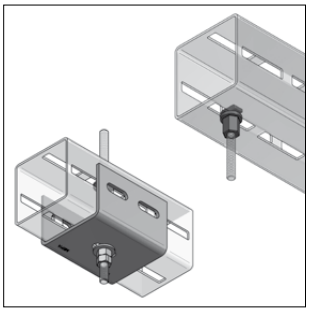

CENTUM Wall connector,
CENTUM Direct connector
Page 1/17

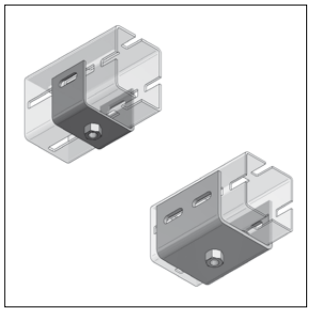

CENTUM Thread connector,
CENTUM Massive connector
Page 1/18

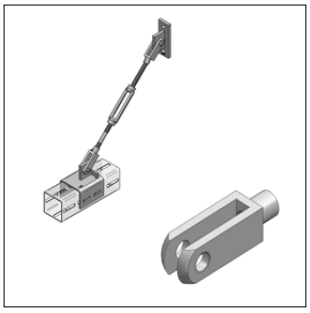

CENTUM tension rod system,
U-heads
Page 1/20

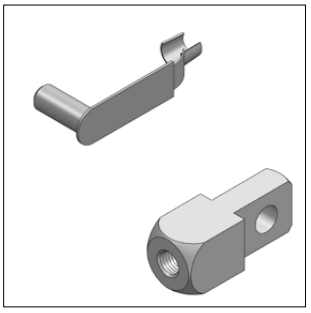

Hinged spring bolt,
U-head counterpart
Page 1/21

CENTUM® - components list

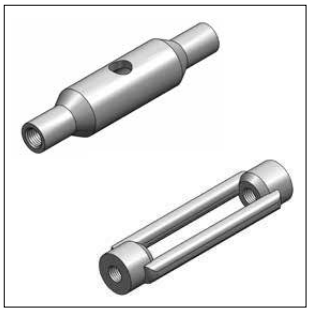

Turnbuckle DIN 1478, 1480
Page 1/22

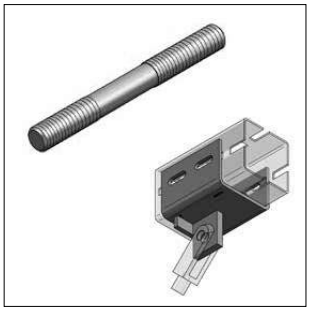

Threaded pin left right,
Tension rod connector
Page 1/23

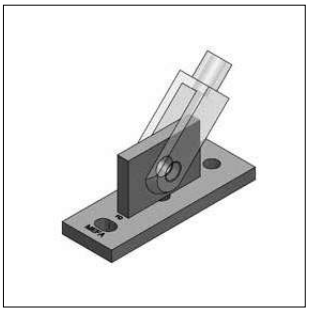

CENTUM Wall connection
Page 1/24

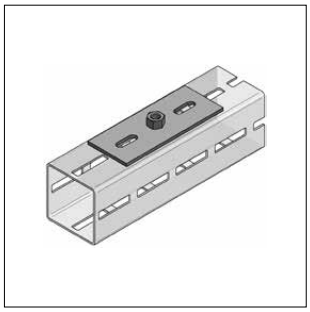

CENTUM Base plate
Page 1/25

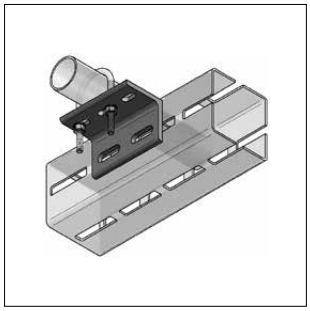

CENTUM Pipe holder
Page 1/25

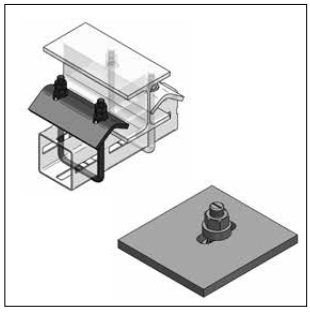

CENTUM Clamping bow light,
Spacer plate for clamping bows
Page 1/26

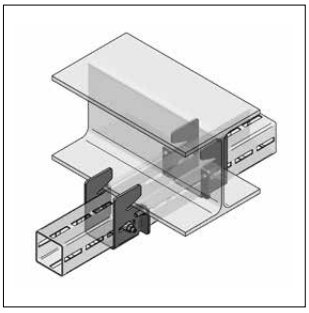

CENTUM Clamping shoe
Page 1/27

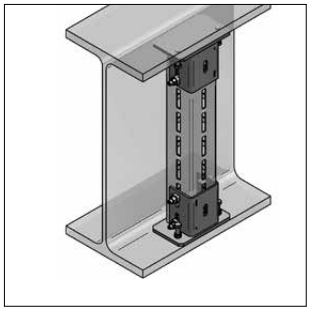

CENTUM Girder clamping
Page 1/28

CENTUM Clamping claws
Page 1/29

CENTUM Washer component AF
Page 1/30

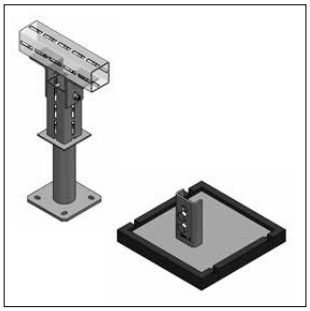

CENTUM Wall- and roof bushing,
Rooftop holder
Page 1/34

Component safety concept: According DIN EN 1991-1	
Global safety coefficient γ	**Safety for impact**
The evaluation of global safety coefficient for the value	Safety tare weight γ_G = 1,35
of impact is based on a ratio of 2/3 of tare weight and	Safety working load γ_Q = 1,50
1/3 of working load.	
$\gamma = (2/3\ \gamma_G + 1/3\ \gamma_Q) \times \gamma_Z = (2/3 \times 1{,}35 + 1/3 \times 1{,}50) \times 1{,}1 = 1{,}54$	
Exceptions	**Safety for resistance**
CENTUM screwing acc. RAL GZ 655-D γ = 2,0	Safety load resistance γ_Z = 1,10

CENTUM® Square profile

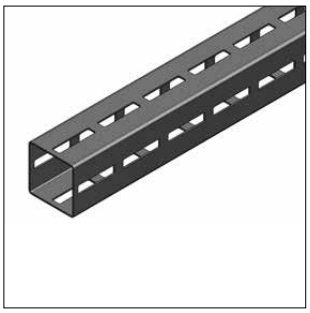

CENTUM® profile XL 80

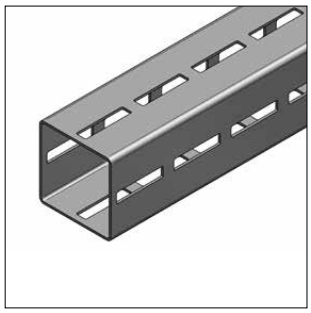

CENTUM® profile XL 100

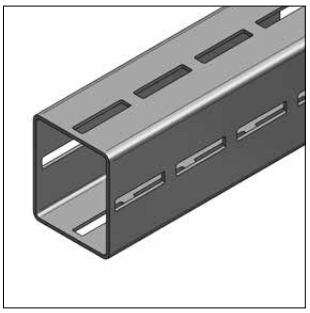

CENTUM® profile XL 120

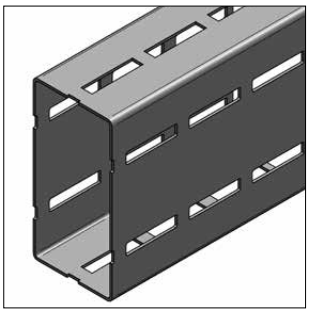

CENTUM® profile XL 200

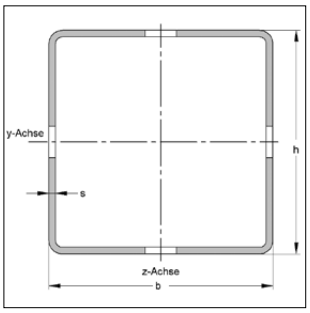

RAL-GZ 655-C

Description of system:
- modular system
- 4-sided without raster in connection with mounting parts
- torsion stiffness
- high load capacity

Technical data:

Material:	steel
Material type of all profiles:	S275J2H
Surface:	hot-dip galvanized according to DIN EN ISO 1461

** At 8 m delivery length special delivery conditions

Identification	Dimensions h x b [mm]	Profile thickness s [mm]	perforation	Length L [m]	Weight [kg/m]	Packing [m]	Part-No.
CENTUM® profile XL 80	80 x 80	2,5	4-sided	6	5,51	6	16008060
CENTUM® profile XL 100	100 x 100	3	4-sided	6	8,46	6	16010060
CENTUM® profile XL 120	120 x 100	4	4-sided	6	12,20	6	16012060
CENTUM® profile XL 120s	120 x 100	5	4-sided	6	14,83	6	16012061
CENTUM® profile XL 200	200 x 100	5	4-sided	6	20,46	6	16020060
CENTUM® profile XL 200 WST	200 x 100	5	4-sided	8**	20,46	8	16020080

CENTUM® overview technical values

Identification	cross-section area	Section modulus of torsion	Geometrical moment of inertia		Section modulus		gyration radius	
	A_k	W_t	I_{Y-Y}	I_{Z-Z}	W_{Y-Y}	W_{Z-Z}	i_Y	i_Z
	cm^2	cm^3	cm^4	cm^4	cm^3	cm^3	cm	cm
Profile XL 80	6,19	36,04	64,51	64,51	16,13	16,13	3,23	3,23
Profile XL 100	9,73	56,40	157,14	157,14	31,43	31,43	4,02	4,02
Profile XL 120	14,45	89,10	310,55	237,23	51,76	47,44	4,64	4,05
Profile XL 120s	17,55	109,25	372,76	284,42	62,12	56,88	4,61	4,03
Profile XL 200	24,15	185,25	1255,68	433,47	125,56	86,69	7,21	4,24

Load values for CENTUM® profile rails can be found at the end of the chapter.

CENTUM® Protecting cap

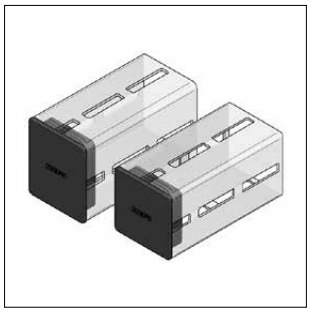

CENTUM® Protecting cap

Specification:
For profile type: XL 80, XL 100 or XL 120

Technical data:
Material: plastic
Material type: PE
Colour: black

Identification	Weight [kg/pc.]	Packing [set]	Part-No.
CENTUM® Protecting cap XL 80	0,056	20	1670080
CENTUM® Protecting cap XL 100	0,092	20	1670100
CENTUM® Protecting cap XL 120	0,064	20	1670120

CENTUM® T-lock head, toothed

01

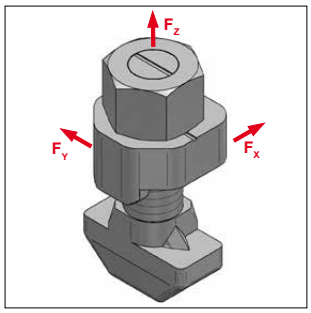

CENTUM® T-lock head

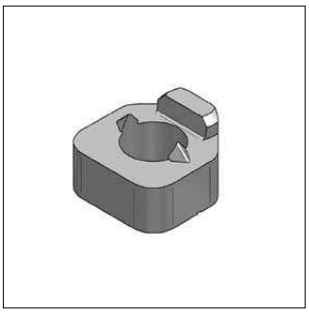
CENTUM® Lock washer

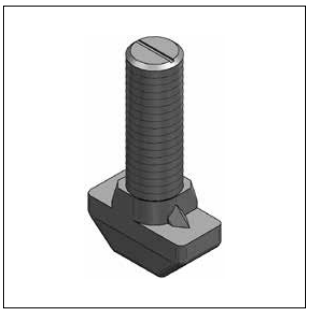
CENTUM® T-lock bolt

RAL GÜTEZEICHEN SCHRAUBBEFESTIGUNG RAL-GZ 655-D

Specification:

For profile type: XL 80, XL 100, XL 120 and XL 200
Features: immovable and form-locking connection
max. load:

	F_x	F_Y	F_Z
XL 80:	8 kN	8kN	3kN
from XL 100:	10 kN	10kN	3kN

Safety γ: 2
Application: C-profile connector

Technical data:

Material: steel
Surface: zinc-nickel

Identification	Property class	recommended tightening torque [Nm]		Weight [kg/pc.]	Packing [pcs.]	Part-No.
		XL 80	from XL 100			
CENTUM® T-lock head M12x40, toothed consisting of:	10.9	90	120	0,120	50	1610011000
CENTUM® Lock washer	10	--	--	0,031	100	1610019000/zn
CENTUM® T-lock bolt, toothed	10.9	90	120	0,064	50	1610012100/zn
CENTUM® hex nut M12 FK10, DIN EN ISO 4032	10	--	--	0,017	100	8989995/zn

Assembly instruction for T-lock head

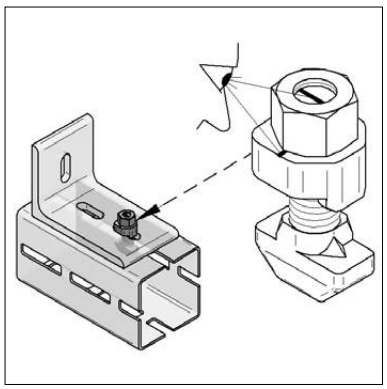
Figure 1

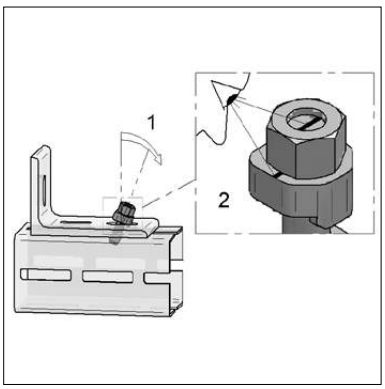

Figure 2

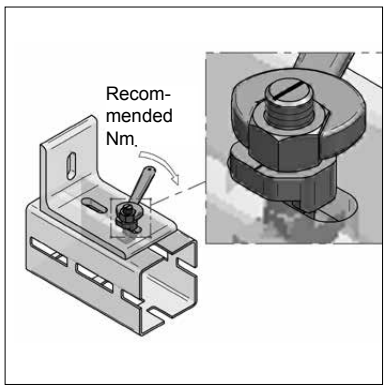

Figure 3

Positioning:

Locate T-lock head into mounting part like shown in Figure 1.

Adjustment:

Turn T-lock head around 90 degrees, so that T-lock bolt stands diagonally to long hole (see 1).

Tilt forward T-lock head, so that guide wedge of Lock washer snaps in long hole (see 2).

Fixation:

Tighten tilted T-lock with 90 Nm (XL 80) or 120 Nm (from XL 100).
T-lock head after dismounting non-reusable.

CENTUM® T-bolt, with steel disk

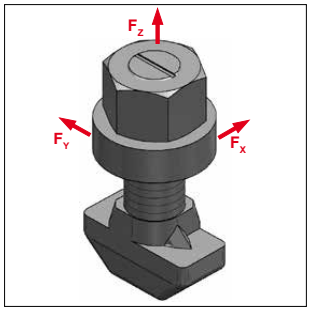

CENTUM® T-bolt

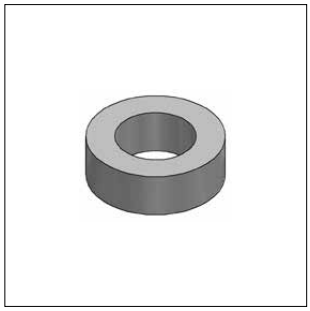
CENTUM® steel disk

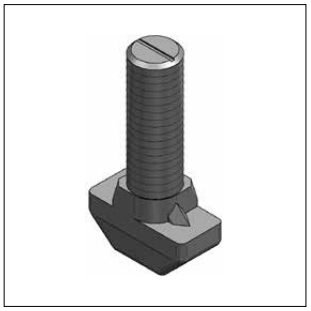
CENTUM® T-lock bolt, toothed

Specification:

For profile type:	XL 80, XL 100, XL 120 and XL 200		
Features:	frictional connection		
max. load:	F_x	F_y	F_z
XL 80:	3 kN	8kN	3kN
from XL 100:	3 kN	10kN	3kN
Safety γ:	2		
Application:	C-profile connector		

Technical data:

Material:	steel
Surface:	zinc-nickel

Identification	Property class	recommended tightening torque [Nm]		Weight [kg/pc.]	Packing [pcs.]	Part-No.
		XL 80	from XL 100			
CENTUM® T-bolt M12x40	10.9	90	120	0,100	50	1610012000
consisting of:						
CENTUM® steel disk	4.6	--	--	0,019	100	1610019100/zn
CENTUM® T-lock bolt, toothed	10.9	90	120	0,064	50	1610012100/zn
CENTUM® Hexagon nut M12 FK10, DIN EN ISO 4032	10	--	--	0,017	100	8989995/zn

CENTUM® Connector

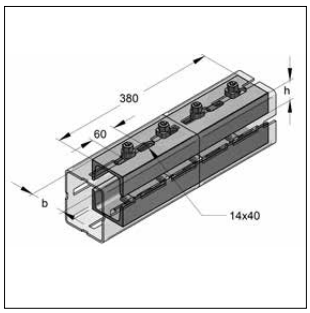

CENTUM® Connector

Specification:

Scope of supply:	mounting accessories, loose insert (8x T-lock head, toothed, M 12/40)
Function:	connection of XL 80, XL 100, XL 120 or XL 200

Technical data:

Material:	steel
Surface u-steel:	hot-dip galvanized
Surface screws:	zinc-nickel

Identification	Profile type:	Limit moment M_G [kNm]	Length [mm]	Width b [mm]	Hight h [mm]	Weight [kg/pc.]	Packing [pc.]	Part-No.
CENTUM® Connector-Set	XL 80	1,6	380	60	30	4,94	1	1640805010
CENTUM® Connector-Set	XL 100, XL 120, XL 200	2	380	80	45	7,90	1	1640005010

CENTUM® Holder

01

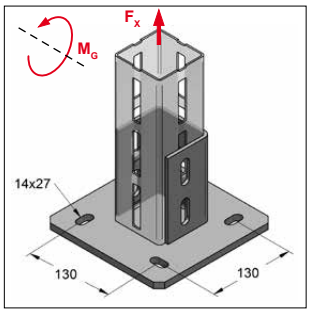

CENTUM® Holder XL 80

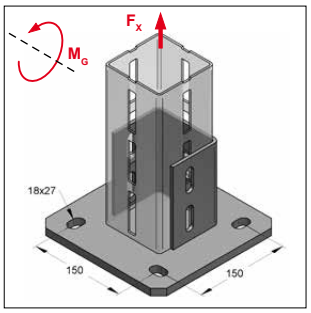

CENTUM® Holder XL 100

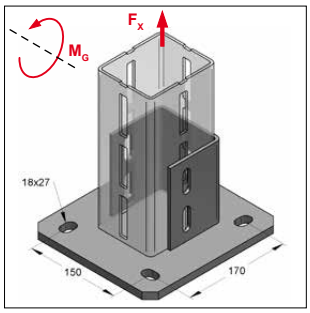

CENTUM® Holder XL 120

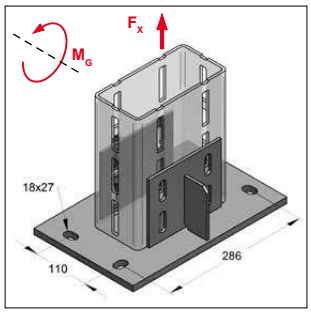

CENTUM® Holder XL 200

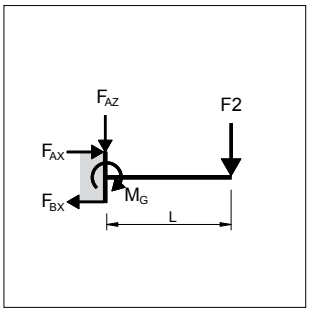

M_G = F2 x L

Specification:

For profile type:	XL 80, XL 100, XL 120 und XL 200
Scope of supply:	T-lock head, toothed, M12/40

* at ulitization of all bolt holes

Technical data:

Material:	steel
Material type:	S235JR
Surface:	hot-dip galvanized
Safety factor:	1,54

Identification	max. load* F_x [kN]	maximum torque M_G* [kNm]	Plate-width [mm]	Plate-length [mm]	Plate-thickness [mm]	Weight [kg/pc.]	Packing [pc.]	Part-No.
CENTUM® Holder XL 80	32	4,2	200	200	10	4,48	1	1620801000
CENTUM® Holder XL 100	40	5,2	220	220	12	6,15	1	1621001000
CENTUM® Holder XL 120	40	5,2	220	240	12	6,71	1	1621201000
CENTUM® Holder XL 200	40	5,2	220	340	12	9,57	1	1622001000

CENTUM® Adaptor

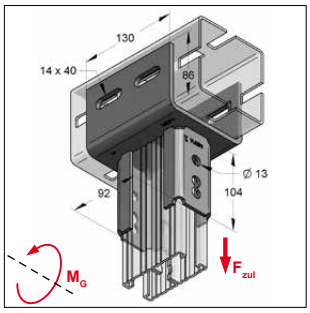

CENTUM® Adaptor
vertical

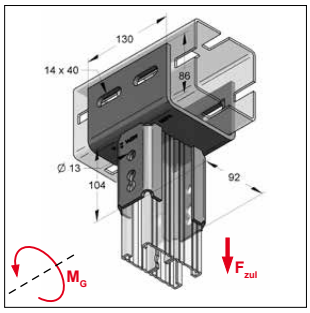

CENTUM® Adaptor
horizontal

Specification:

For profile type:	XL 100, 45/90
Application:	to connect C-profile rails 45/90
Needed accessory:	threaded square plate hexagon screw t-lock head

Technical data:

Material:	steel
Material type:	S235JR
Surface:	hot-dip galvanized
Safety factor:	1,54

* loads refering to component, not to connection

Identification	max. load* F_{zul} [kN]	maximum torque M_G [kNm] fbv	[kNm] fsv	Length [mm]	Thickness [mm]	Weight [kg/pc.]	Packing [pc.]	Part-No.
CENTUM® Adaptor vertical	12	0,80	0,35	130	6	2,32	1	1621005011
CENTUM® Adaptor horizontal	12	0,80	0,35	130	6	2,32	1	1621005021

CENTUM® Girder fixation

01

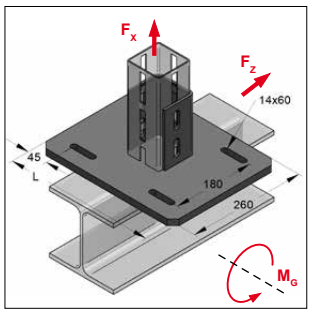

Girder fixation XL 80, vertical

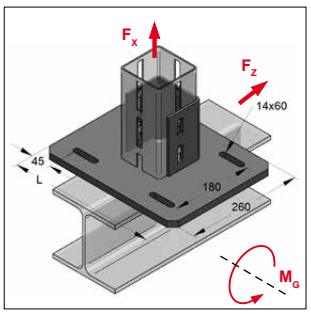

Girder fixation XL 100, vertical

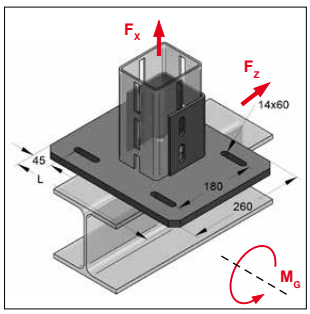

Girder fixation XL 120, vertical

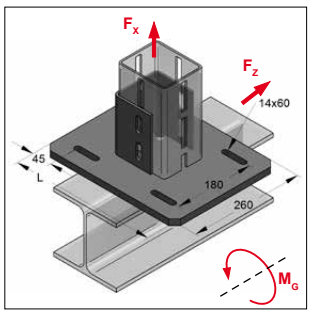

Girder fixation XL 120, horizontal

Specification:

For profile type:	XL 100
On request:	XL 80, XL 120
Needed accessory:	T-lock head, toothed, M12/40 clamping claw AF/LR

Technical data:

Material:	steel
Material type:	S235JR (profile holder)
	S355 JR (plate)
Surface:	hot-dip galvanized

* on request

Identification	Plate-width [mm]	Plate-length L [mm]	Plate-thickness [mm]	for min. girder width [mm]	for max. girder width [mm]	Weight [kg/pc.]	Packing [pc.]	Part-No.
Girder fixation XL 80, size 1, vertical*	260	240	15	46	120	8,59	1	162080201
Girder fixation XL 80, size 2, vertical*	260	332	15	140	220	11,62	1	162080202
Girder fixation XL 80, size 3, vertical*	260	424	15	240	320	14,65	1	162080203
Girder fixation XL 100, size 1, vertical	260	240	15	46	120	8,82	1	162100201
Girder fixation XL 100, size 2, vertical	260	332	15	140	220	11,85	1	162100202
Girder fixation XL 100, size 3, vertical	260	424	15	240	320	14,88	1	162100203
Girder fixation XL 120, size 1, vertical*	260	240	15	46	120	8,93	1	162120201
Girder fixation XL 120, size 2, vertical*	260	332	15	140	220	11,96	1	162120202
Girder fixation XL 120, size 3, vertical*	260	424	15	240	320	14,99	1	162120203
Girder fixation XL 120, size 1, horizontal*	260	240	15	46	120	8,93	1	162120301
Girder fixation XL 120, size 2, horizontal*	260	332	15	140	220	11,96	1	162120302
Girder fixation XL 120, size 3, horizontal*	260	424	15	240	320	14,99	1	162120303

Table: Loads are related to clamping claws for adaption to steel girder, galvanized incl. scews class 8.8 and washer.

In combination with 4x clamping claw type AF, M12 (see page 1/27)			
max. load	$F_{X,}$ max (Pulling force) [kN]	$F_{Z,}$ max (Shear) [kN]	M_g** [kNm]
CENTUM® Girder fixation XL 80	32	7,8	4,2
CENTUM® Girder fixation XL 100	34	7,8	4,2
CENTUM® Girder fixation XL 120	34	7,8	4,2

In combination with 4x clamping claw type LR, M12 (see page 1/30)			
max. load	$F_{X,}$ max (Pulling force) [kN]	$F_{Z,}$ max (Shear) [kN]	M_g** [kNm]
CENTUM® Girder fixation XL 80	18	1,8	4,2
CENTUM® Girder fixation XL 100	18	1,8	4,2
CENTUM® Girder fixation XL 120	18	1,8	4,2

** at ulitization of all bolt holes

CENTUM® Console

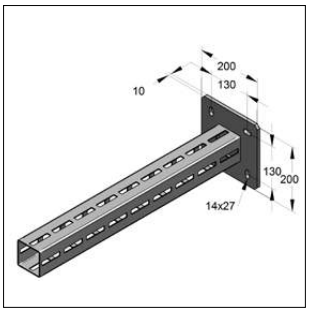

CENTUM® Console XL 80

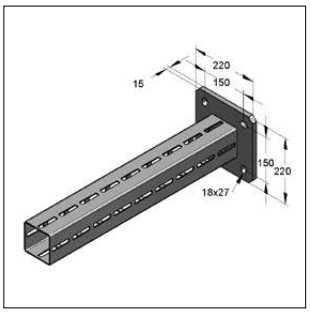

CENTUM® Console XL 100

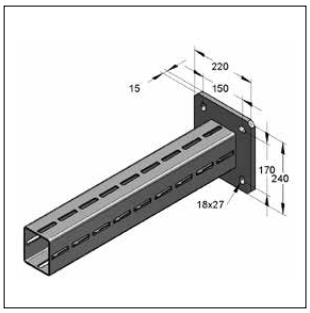

CENTUM® Console XL 120

Specification:

For profile type: XL 80, 100 and 120

* Delivery time on request, variant demand possible

Technical data:

Material:	steel
Material type (plate):	S235JR
Material type (rail):	S275JR
Surface:	hot-dip galvanized
Safety factor:	1,35

Identification	Length [mm]	max. load 1 F1 [kN]	max. load 2 F2 [kN]	max. load 3 qo [kN/m]	Weight [kg/pc.]	Packing [pc.]	Part-No.
CENTUM® Console XL 80	720	8,38	4,19	11,64	7,26	1	1630800720
CENTUM® Console XL 80	960	6,29	2,94	6,55	8,58	1	1630800960
CENTUM® Console XL 80	1440	4,19	1,88	4,18	11,23	1	1630801440
CENTUM® Console XL 100	720	16,17	8,08	22,45	11,92	1	1631000720
CENTUM® Console XL 100	960	12,13	6,06	12,63	13,62	1	1631000960
CENTUM® Console XL 100	1440	8,08	4,58	5,61	18,02	1	1631001440
CENTUM® Console XL 120*	720	25,02	12,51	34,75	15,17	1	1631200720
CENTUM® Console XL 120*	960	18,77	9,38	19,55	18,10	1	1631200960
CENTUM® Console XL 120*	1440	12,51	6,26	8,69	23,96	1	1631201440

max. load 1 (LF1)

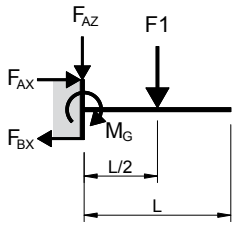

$F_{AZ} = F1$

$F_{AZ} = F1$	$M_G = \frac{F1 * L}{2}$

max. load 2 (LF2)

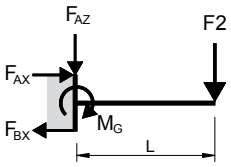

$F_{AZ} = F2$

$F_{AZ} = F2$	$M_G = F2 * L$

max. load 3 (LF3)

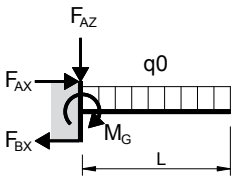

$F_{AZ} = qo * L$

$F_{AZ} = q0 * L$	$M_G = \frac{q0 * L^2}{2}$

Limit moment XL 80	M_G:	3.017,28 Nm
Support reaction force XL 80	F_{AX}:	23,21 kN
Support reaction force XL 80	F_{BX}:	23,21 kN
Limit moment XL 100 und 120	M_G:	9.008,0 Nm
Support reaction force XL 100 und 120	F_{AX}:	53,0 kN
Support reaction force XL 100 und 120	F_{BX}:	53,0 kN

Remark:
All load capacities excessive refer to static loads.

CENTUM® Angles - corner connector

01

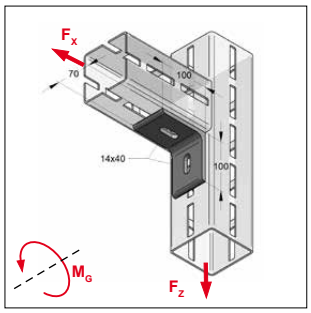

CENTUM® 2-hole angle
XL 80

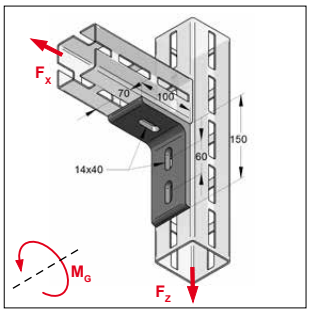

CENTUM® 3-hole angle
XL 80

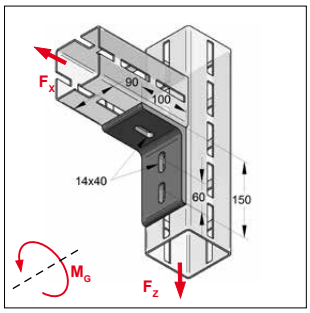

CENTUM® 3-hole angle
from XL 100

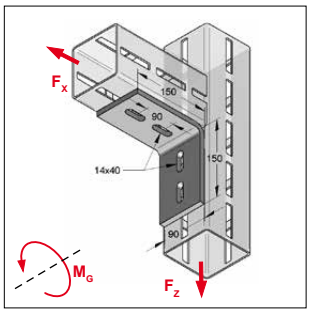

CENTUM® 4-hole angle
from XL 100

Specification:

For profile type:	XL 80, XL 100, XL 120 und XL 200
Required accessory:	T-lock head, toothed, M12/40

* by using of all screw holes

Technical data:

Material:	steel
Material type:	S235JR
Surface:	hot-dip galvanized
Safety factor:	1,54

Remark: Always align elongated holes of components in direction of elongated holes of CENTUM® profile.

Identification	max. load F_X [kN]	max. load F_Z [kN]	max. limited torque M_G* [kNm]	Weight [kg/pc.]	Packing [pc.]	Part-No.
CENTUM® 2-hole angle XL 80	5,2	8	0,40	0,87	1	1640081005
CENTUM® 3-hole angle XL 80	5,2	16	0,46	1,33	1	1640081010
CENTUM® 3-hole angle from XL 100	6,0	20	0,60	1,74	1	1640001010
CENTUM® 4-hole angle from XL 100	6,0	20	0,50	2,02	1	1640001020

CENTUM® Angles horizontal - cross connector

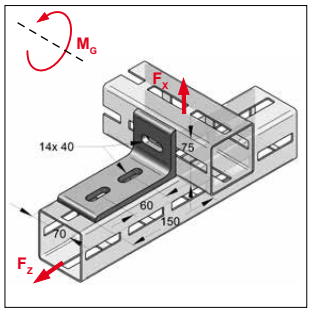

CENTUM® 3-hole angle
horizontal XL 80

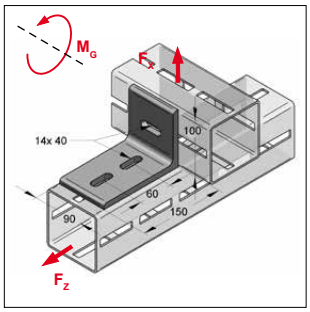

CENTUM® 3-hole angle
horizontal XL 100

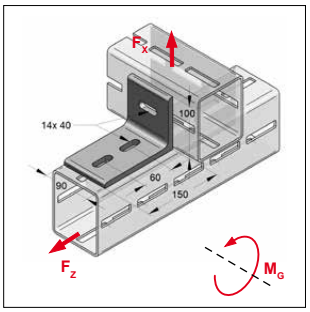

CENTUM® 3-hole angle
horizontal XL 120

Specification:

For profile type:	XL 80, XL 100, XL 120 und XL 200
Required accessory:	T-lock head, toothed, M12/40

* by using of all screw holes

Technical data:

Material:	steel
Material type:	S235JR
Surface:	hot-dip galvanized
Safety factor:	1,54

Remark: Always align elongated holes of components in direction of elongated holes of CENTUM® profile.

Identification	max. load F_X [kN]	max. load F_Z [kN]	max. limited torque M_G* [kNm]	Weight [kg/pc.]	Packing [pc.]	Part-No.
CENTUM® 3-hole angle horizontal XL 80	5,2	16	0,4	1,07	1	1640081012
CENTUM® 3-hole angle horizontal XL 100	6	20	0,6	1,74	1	1640001012
CENTUM® 3-hole angle horizontal XL 120	6	20	0,6	1,74	1	1641201012

CENTUM® Angle-shoe XL

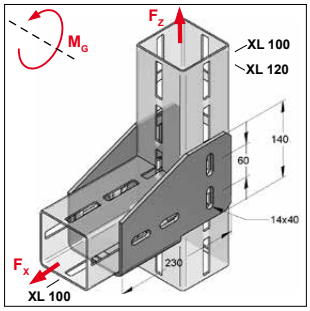

CENTUM® Angle-shoe XL 100

Specification:

For profile type: XL 100
High-strength corner connection with profile support
Required accessory: T-lock head, toothed, M12/40

Technical data:

Material: steel
Material type: S235JR
Surface: hot-dip galvanized
Safety factor: 1,54

* by using of all screw holes

Identification	max. load F_X [kN]	max. load F_Z [kN]	max. limited torque M_G* [kNm]	Weight [kg/pc.]	Packing [pc.]	Part-No.
CENTUM® Angle-shoe XL 100	40	40	1,2	3,58	1	1641002010

CENTUM® Corner plate

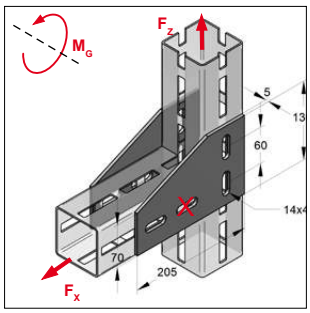

CENTUM® Corner plate
use in pairs

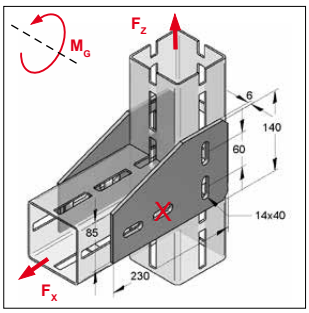

CENTUM® Corner plate L
from XL 100

Specification:

For profile type: XL 80, XL 100, XL 120 und XL 200
Required accessory: T-lock head, toothed, M12/40

* by using of all screw holes

Remark: for M_G = 0 only one screw per side at X

Technical data:

Material: steel
Material type: S235JR
Surface: hot-dip galvanized
Safety factor: 1,54

Identification	profile type	max. load F_X [kN]	max. load F_Z [kN]	max. limited torque M_G* [kNm]	Weight [kg/pc.]	Packing [pc.]	Part-No.
CENTUM® Corner plate XL 80 (use in pairs)	XL 80	32	32	0,95*	0,92	1	1640083010
CENTUM® Corner plate L (use in pairs)	from XL 100	40	40	1,20*	1,38	1	1640003010

CENTUM® Cross plate

01

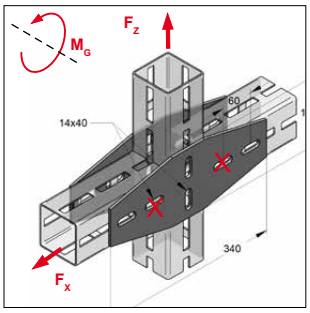

CENTUM® Cross plate
XL 80

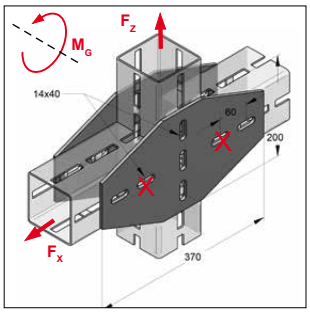

CENTUM® Cross plate
from XL 100

Specification:
For profile type: XL 100, XL 120 and XL 200
Required accessory: T-lock head, toothed, M12/40

* by using of all screw holes
Remark: for M_G = 0 only one screw per side at X

Technical data:
Material: steel
Material type: S235JR
Surface: hot-dip galvanized
Safety factor: 1,54

Identification	profile type	max. load F_X [kN]	max. load F_Z [kN]	max. limited torque M_G* [kNm]	Weight [kg/pc.]	Packing [pc.]	Part-No.
CENTUM® Cross plate XL 80 (use in pairs)	XL 80	32	32	0,95*	1,47	1	1640083020
CENTUM® Cross plate (use in pairs)	from XL 100	40	40	1,20*	2,89	1	1640003020

CENTUM® T-plate

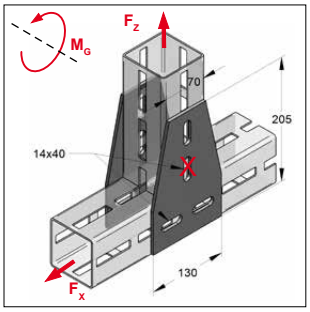

CENTUM® T-plate
XL 80

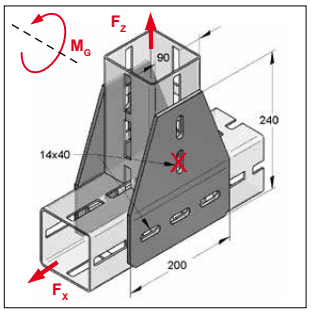

CENTUM® T-plate
from XL 100

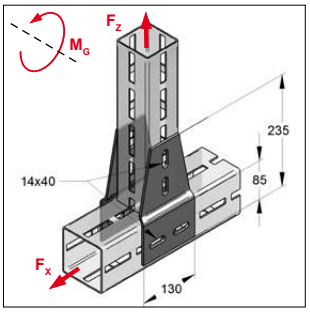

CENTUM® T-plate cranked sym.

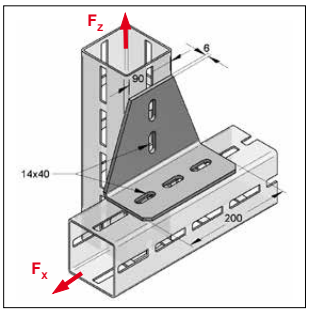

CENTUM® T-plate, angled

Specification:
For profile type: XL 80, XL 100, XL 120 und XL 200
Required accessory: T-lock head, toothed, M12/40

Remark: for M_G = 0 only one screw per side at X

Technical data:
Material: steel
Material type: S235JR
Surface: hot-dip galvanized
Safety factor: 1,54

[1] by using of all screw holes

[2] use in pairs

[3] cross profile XL 100; any connecting profile

Identification	profile type	max. load F_X [kN]	max. load F_Z [kN]	max. limited torque M_G* [kNm]	Weight [kg/pc.]	Packing [pc.]	Part-No.
CENTUM® T-plate XL 80[2]	XL 80	32	32	0,95[1]	0,92	1	1640081030
CENTUM® T-plate[2]	frome XL 100	40	40	1,20[1]	1,97	1	1640001030
CENTUM® T-plate cranked sym.[2]	to connect XL 80 with XL 100	32	32	0,95[1]	1,08	1	1640003030
	to connect XL 100 with XL 120	40	40	1,20[1]			
CENTUM® T-plate, angled	XL 80, XL 100, XL 120, XL 200[3]	20	9	-	1,99	1	1640001040

CENTUM® Angle coupler

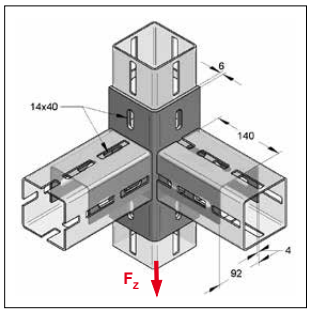

CENTUM® Angle coupler 90°

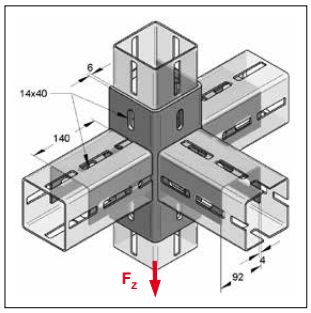

CENTUM® Angle coupler 180°

Specification:

For profile type:	XL 100
Required accessory:	T-lock head, toothed, M12/40

Technical data:

Material:	steel
Material type:	S235JR
Surface:	hot-dip galvanized
Safety factor:	1,54

Identification	max. load F_Z [kN]	Weight [kg/pc.]	Packing [pc.]	Part-No.
CENTUM® Angle coupler 90°	20	4,72	1	1641006010
CENTUM® Angle coupler 180°	20	7,12	1	1641006020

CENTUM® Joint holder

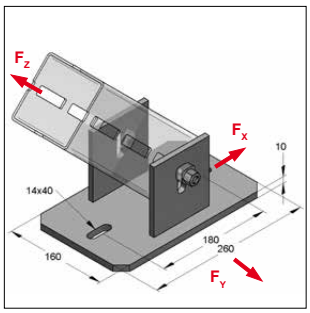

CENTUM® Joint holder
XL 100 vertical

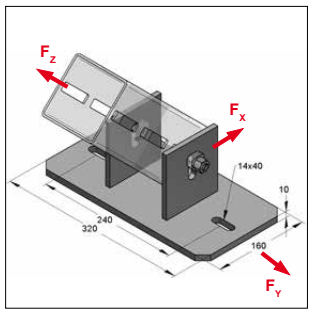

CENTUM® Joint holder
XL 100 horizontal

Specification:

For profile type:	XL 100 or XL 120
Required accessory:	T-bolt, with steel disk, M12/40
Tightening torque:	60 Nm
Delivery time:	on request

Technical data:

Material:	steel
Material type:	S235JR
Surface:	hot-dip galvanized
Safety factor:	1,54

Identification	max. load F_X [kN]	max. load F_Z [kN]	max. load F_Y [kN]	center hole Plate	Dimension Plate L x B x S	Weight [kg/pc.]	Packing [pc.]	Part-No.
CENTUM® Joint holder XL 100 vertical	6,3	20	11	180	260 x 160 x 10	4,89	1	1641004010
CENTUM® Joint holder XL 100 horizontal	6,3	20	11	240	320 x 160 x 10	5,72	1	1641004020

CENTUM® Joint connection

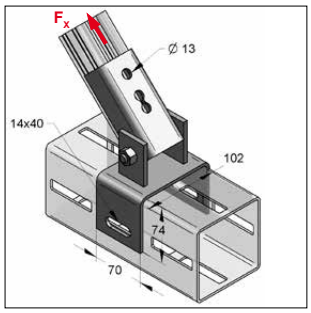

Joint connection XL 100

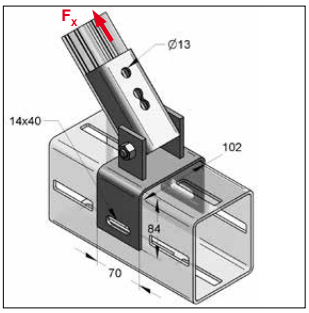

Joint connection XL 120

Specification:
For profile type: XL 100, XL 120 and XL 200
in combination with C-profile rails 45

Technical data:
Material: steel
Material type: S235JR
Surface: zinc-nickel

[1] loads refering to component, not to connection

Identification	max. load[1] F_x [kN]	Hole-Ø [mm]	Elongated hole-Ø [mm]	Weight [kg/pc.]	Packing [pc.]	Part-No.
CENTUM® Joint connection XL 100	7,0	13	14 x 40	1,26	1	1641014110
CENTUM® Joint connection XL 120	7,0	13	14 x 40	1,31	1	1641214110

CENTUM® C-profile connector

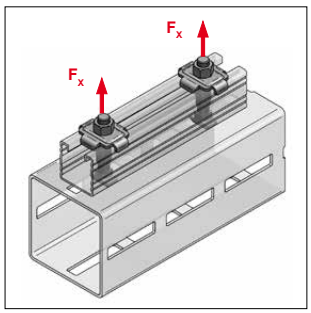

CENTUM® C-profile connector

Specification:
For profile type: XL 100, XL 120 and XL 200
Application: to connect profile rails

Technical data:
Material: steel
Material type: S235JR
Surface: galvanized

Identification	for profile-height [mm]	max. load F_x [kN]	tightening torque [Nm]	Weight [kg/pc.]	Packing [pc.]	Part-No.
CENTUM® C-profile connector	40-45	2,0	10	0,160	50	1640017040
CENTUM® C-profile connector	60	2,0	10	0,170	50	1640017060

CENTUM® Hanger massive

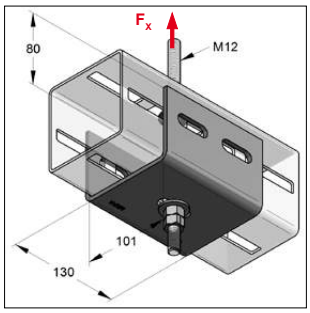

CENTUM® Hanger massive

Specification:

For profile type:	XL 100, XL 120 and XL 200
Application:	Suspension of CENTUM® Profiles with threaded rods
Scope of supply:	CENTUM® retaining profile (for profile width 100 mm) 3x nut M12 2x Washer 13 x 30 x 2,5
Required accessory:	threaded rod M12

Technical data:

Material:	steel
Material type:	S235JR
Surface:	hot-dip galvanized
Safety factor:	1,54

Identification	Thread	max. load F_x [kN]	Weight [kg/pc.]	Packing [pc.]	Part-No.
CENTUM® Hanger massive	M12	10,0	1,50	1	1620003010

CENTUM® Direct connector

CENTUM® Direct connector

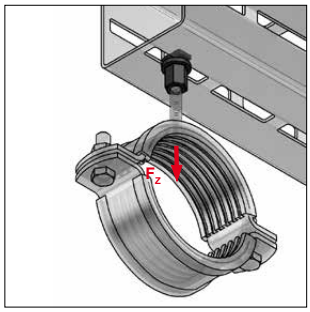

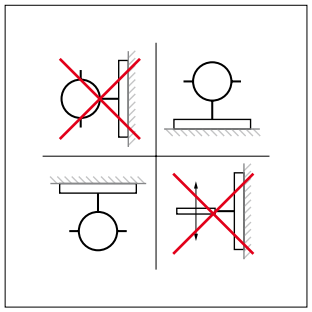

Mounting recommendation

Specification:

For profile type:	XL 80, XL 100, XL 120, XL 200
Application:	direct connection for M10 or M12 thread

Technical data:

Material type:	steel
Surface:	zinc-nickel
Safety factor:	1,54

Identification	wrench size	height collar nut [mm]	recommended tightening torque [Nm]	max. load F [kN]	Weight [kg/pc.]	Packing [pc.]	Part-No.
CENTUM® Direct connector	SW 17	25	25	3,0	0,072	50	1640016010
CENTUM® Direct connector	SW 17	25	25	3,0	0,070	50	1640016012

CENTUM® Thread connector

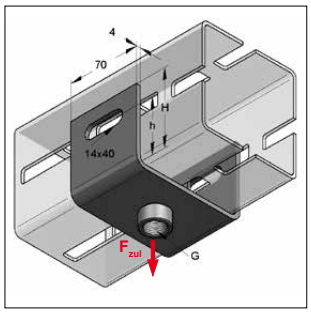

CENTUM® Thread connector
XL 80 / XL 100 1/2“

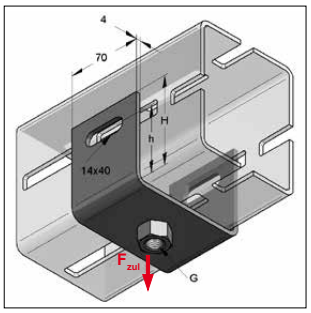

CENTUM® Thread connector
XL 120 M16

Specification:

For profile type: XL 80, XL 100, XL 120 and XL 200

Required: 2 x T-lock head, toothed, M12/40

Technical data:

Material: steel
Material type: S235JR
Surface: zinc-nickel
Safety factor: 1,54

Identification	Profile type	thread G	max. load F_{zul} [kN]	H [mm]	h [mm]	Weight [kg/pc.]	Packing [pc.]	Part-No.
CENTUM® Thread connector	XL 80	M16	4,0	64	40	0,480	1	1640818007
CENTUM® Thread connector	XL 80	1/2"	4,0	64	40	0,470	1	1640818008
CENTUM® Thread connector	XL 80	1"	4,0	64	40	0,520	1	1640818010
CENTUM® Thread connector	XL 100 / XL 200	M12	5,0	74	50	0,550	1	1641018006
CENTUM® Thread connector	XL 100 / XL 200	M16	5,0	74	50	0,557	1	1641018007
CENTUM® Thread connector	XL 100 / XL 200	1/2"	5,0	74	50	0,557	1	1641018008
CENTUM® Thread connector	XL 100 / XL 200	1"	5,0	74	50	0,610	1	1641018010
CENTUM® Thread connector	XL 120	M16	5,0	84	60	0,620	1	1641218007
CENTUM® Thread connector	XL 120	1/2"	5,0	84	60	0,610	1	1641218008
CENTUM® Thread connector	XL 120	1"	5,0	84	60	0,660	1	1641218010

CENTUM® Massive connector

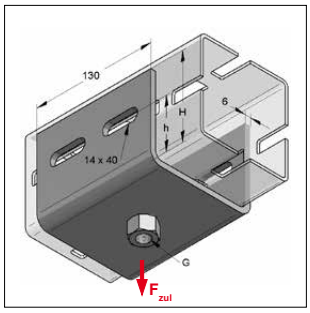

CENTUM® Massive connector
XL 100 M16

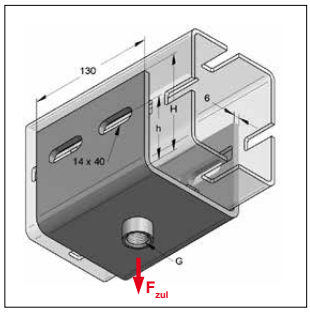

CENTUM® Massive connector
XL 120 1/2"

Specification:

For profile type: XL 100, XL 120 and XL 200

Required: 4 x T-lock head, toothed, M12/40

Technical data:

Material:	steel
Material type:	S235JR
Surface:	zinc-nickel
Safety factor:	1,54

Identification	Profile type	thread G	max. load F_{zul} [kN]	H [mm]	h [mm]	Weight [kg/pc.]	Packing [pc.]	Part-No.
CENTUM® Massive connector	XL 100 / XL 200	M16	10,0	86	50	1,65	1	1641019007
CENTUM® Massive connector	XL 100 / XL 200	1/2"	10,0	86	50	1,64	1	1641019008
CENTUM® Massive connector	XL 100 / XL 200	1"	10,0	86	50	1,69	1	1641019010
CENTUM® Massive connector	XL 120	M16	10,0	96	60	1,78	1	1641219007
CENTUM® Massive connector	XL 120	1/2"	10,0	96	60	1,77	1	1641219008
CENTUM® Massive connector	XL 120	1"	10,0	96	60	1,82	1	1641219010

Tension rod system

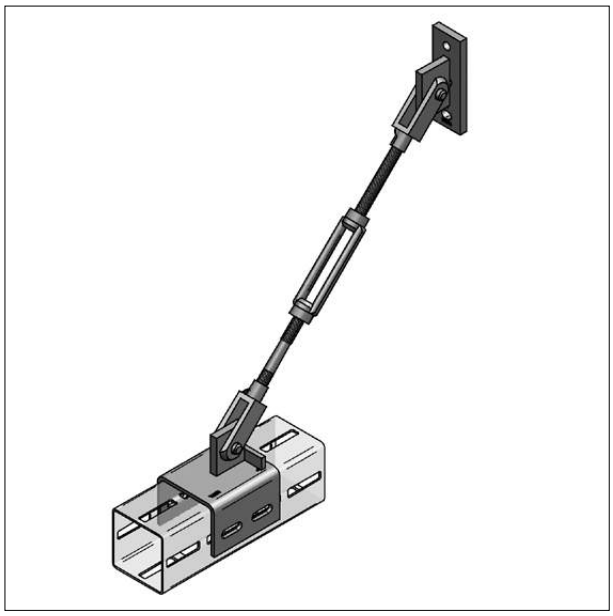

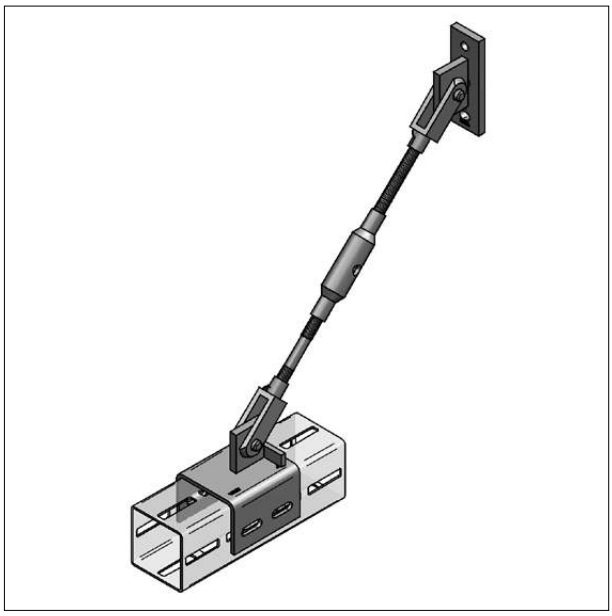

Tension rod system consisting of U-heads,
turnbuckles and threaded rods

U-head according to DIN 71752

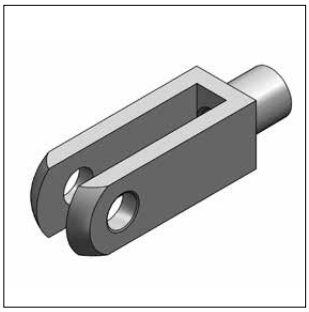

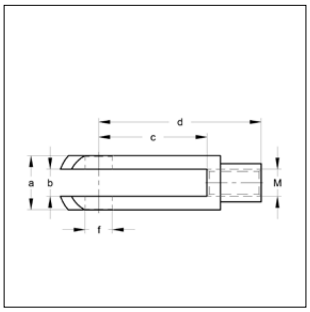

U-head acc. DIN 71752

mounting unit/hanger chain
pageSeite 3/13

Specification:

Application area: for tension rod system or hanger chain (page 3/13).
Required accessory: hinged spring bolt

Technical data:

Material: steel
Surface: galvanized

Identification	Dimension						max. load	Weight	Packing	Part-No.
	a [mm]	b [mm]	c [mm]	d [mm]	M [mm]	f [mm]	[kN]	[kg/pc.]	[pc.]	
U-head 12x48	24	12	48	72	M12	12	20,0	0,175	10	1660007312
U-head 16x64	32	16	64	96	M16	16	20,0	0,414	5	1660007316

Hinged spring bolt for U-head according DIN 71752

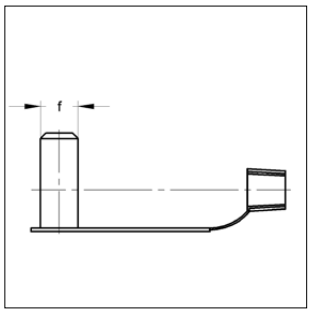

Hinged spring bolt for U-head

Specification:

Application area: Lock pin for U-head according DIN 71752

Required accessory: U-head according DIN 71752

Technical data:

Material: steel

Surface: galvanized

Identification	measure f [mm]	Weight [kg/pc.]	Packing [pc.]	Part-No.
Hinged spring bolt 12x48	12	0,037	10	1660007252
Hinged spring bolt 16x64	16	0,075	5	1660007256

U-head counterpart

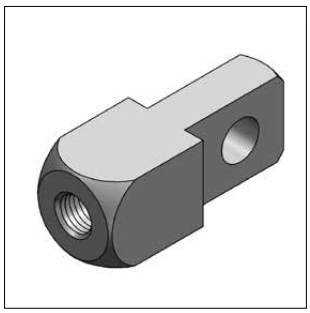

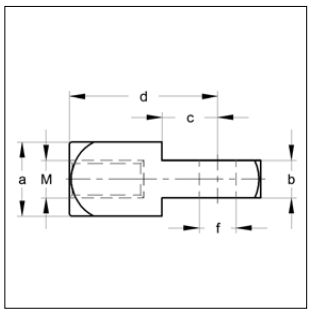

U-head counterpart

Specification:

Application area: in combination with U-heads acc. DIN 71752
e.g. hanger chain see pageSeite 3/13.

Accessory: U-head acc. DIN 71752 and hinged spring bolt

Technical data:

Material: steel

Surface: galvanized

Identification	Dimension a [mm]	b [mm]	c [mm]	d [mm]	M [mm]	f [mm]	max. load [kN]	Weight [kg/pc.]	Packing [pc.]	Part-No.
U-head counterpart 12x24	24	12	18	48	M12	12	20	0,168	1	1660007352
U-head counterpart 16x32	32	16	24	64	M16	16	20	0,397	1	1660007356

Turnbuckle according to DIN 1478 (steel)

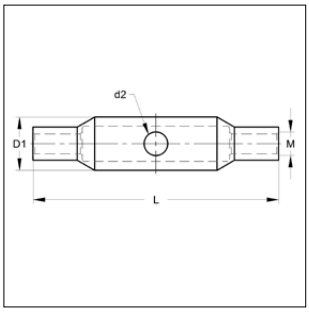

Turnbuckle steel DIN 1478

Specification:

Application area: strain of tension rods in combination with leaft-hand right-hand threaded pin

Accessory: left-hand right-hand threaded pin, threaded rod and u-heads

Technical data:

Material: steel

Surface: galvanized

Identification	Dimension D1 [mm]	d2 [mm]	M [mm]	L [mm]	Adjust-ability [mm]	max. load [kN]	Weight [kg/pc.]	Packing [pc.]	Part-No.
Turnbuckle steel M12	25	10	M12	125	90	24,0	0,241	1	1660007412
Turnbuckle steel M16	30	10	M16	170	120	44,0	0,370	1	1660007416

Turnbuckle according DIN 1480 (forged, open shape)

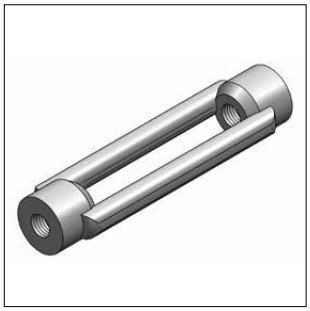

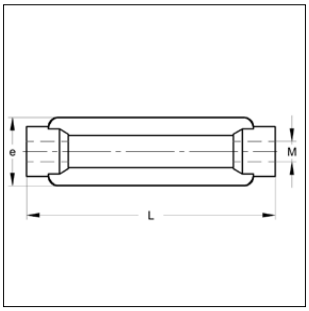

Turnbuckle forged DIN 1480

Specification:

Application area: strain of tension rods in combination with leaft-hand right-hand threaded pin

Accessory: left-hand right-hand threaded pin, threaded rod and u-heads

Technical data:

Material: steel

Surface: galvanized

Identification	Dimension e [mm]	M [mm]	L [mm]	Adjust-ability [mm]	max. load [kN]	Weight [kg/pc.]	Packing [pc.]	Part-No.
Turnbuckle forged M12	34	M12	125	80	9,3	0,247	1	1660007452
Turnbuckle forged M16	42	M16	170	110	11,2	0,511	1	1660007456

Threaded pin left right

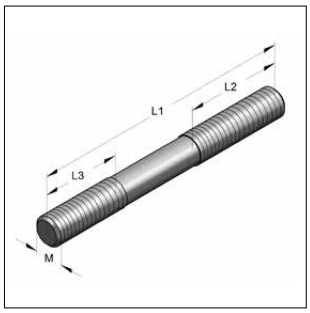

Threaded pin left right

Specification:

Application area: for tension rod system between U-head and turnbuckle

Accessory: turnbuckle and U-head

Technical data:

Material: steel

Surface: galvanized

FK: 4.6

Identification	Dimension L1 [mm]	L2 [mm]	L3 [mm]	M [mm]	max. load [kN]	Weight [kg/pc.]	Packing [pc.]	Part-No.
Threaded pin L/R M12	250	130	80	M12	20,64	0,220	1	1660007212
Threaded pin L/R M16	250	130	80	M16	38,43	0,400	1	1660007216

CENTUM® Tension rod connector

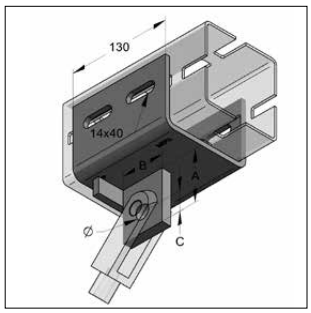

CENTUM® Tension rod connector

Specification:

Application area: connection between CENTUM® profile channel and tension rod

For profile type: XL 100, XL 120 and XL 200

Accessory: t-lock head, toothed, M12/40

Technical data:

Material: steel

Material type: S235JR

Surface: hot-dip galvanized

Safety factor: 1,54

Identification	Profil type	A [mm]	B [mm]	C [mm]	Ø [mm]	max. load Last [kN]	Weight [kg/pc.]	Packing [pc.]	Part-No.
Tension rod connector M12	XL100 / XL200	60	50	20	14	20,0	2,07	1	1621004010
Tension rod connector M16	XL100 / XL200	65	55	25	18	20,0	2,17	1	1621004011
Tension rod connector M12	XL 120	60	50	20	14	20,0	2,21	1	1621204010
Tension rod connector M16	XL 120	65	55	25	18	20,0	2,30	1	1621204011

CENTUM® Wall connection

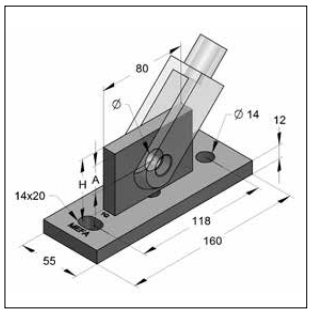

CENTUM® Wall connection

Specification:

Application area: Connection between mounting underground and tension rod

Accessory: dowels according to dimension

Technical data:

Material: steel
Material type: S235JR
Surface: hot-dip galvanized
Safety factor: 1,54

Identification	H	A	Ø	max. load	Weight	Packing	Part-No.
	[mm]	[mm]	[mm]	[kN]	[kg/pc.]	[pc.]	
Wall connection M12	50	20	14	20,0	1,18	1	1620004010
Wall connection M16	55	25	18	20,0	1,28	1	1620004011

Application example tension rod system

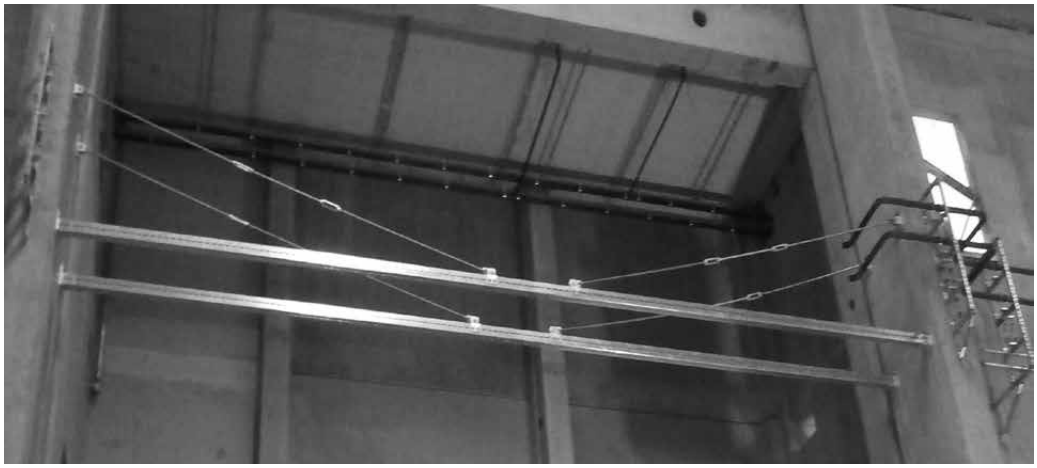

CENTUM® Base plate

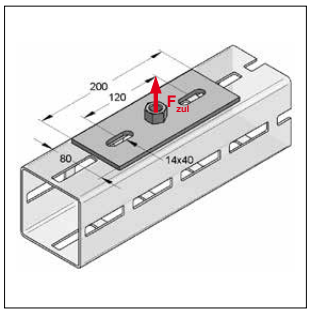

CENTUM® Base plate M12

Specification:
For profile type: XL100, XL120 and XL 200

Required accessory: T-lock head, toothed, M12/40 or T-bolt with steel disk, M12/40

Technical data:
Material: steel
Material type: S235JRG2
Surface: zinc-nickel
Safety factor: 1,54

Identification	Length [mm]	Height [mm]	max. load F_{zul} [kN]	Thickness [mm]	Weight [kg/pc.]	Packing [pc.]	Part-No.
CENTUM® Base plate M12	200	80	5,5	6	0,760	1	1640018106
CENTUM® Base plate M16	200	80	5,5	6	0,790	1	1640018107
CENTUM® Base plate 1/2"	200	80	5,5	6	0,780	1	1640018108
CENTUM® Base plate 1"	200	80	5,5	6	0,830	1	1640018110

CENTUM® Pipe holder

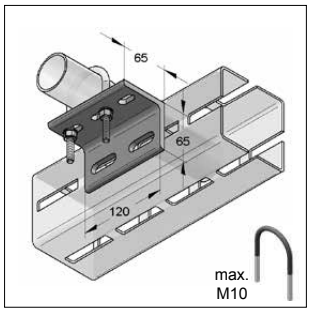

CENTUM® Ø 21,3 - 76,1

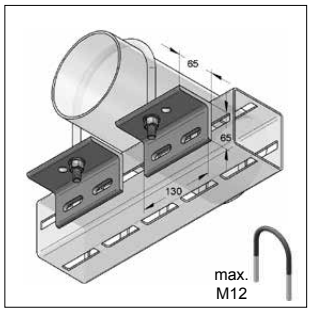

CENTUM® Ø 88,9 - 219,1

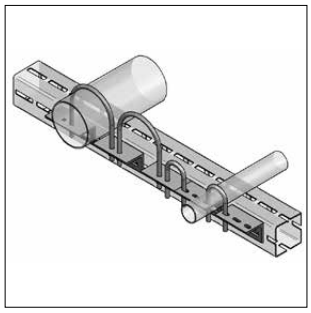

combined exemplar

Specification:
For pipe diameter: Ø 21,3 - 219,1 mm
Mounting instruction: pipe must overlie
Advantage: installation of different pipe diameter
Required accessory: T-lock head and U-bolt
Delivery time: on request

Technical data:
Material: steel
Material type: S235JRG2
Surface: hot-dip galvanized

Identification	for pipe-Ø	Length [mm]	Height [mm]	Thickness [mm]	Weight [kg/pc.]	Packing [pcs.]	Part-No.
CENTUM® Pipe holder	**21,3 - 76,1**	120	65	7	0,81	1	1640008200
CENTUM® Pipe holder	**88,9 - 219,1**	130	65	7	1,80	2	1640008210

CENTUM® Clamping bow light

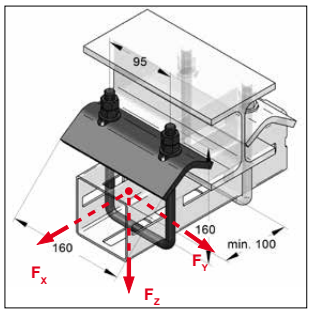

CENTUM® Clamping bow light
XL 80

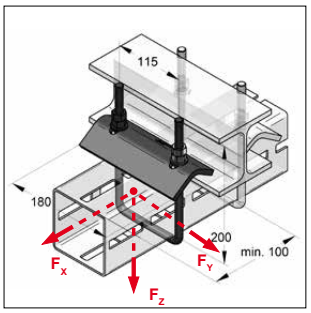

CENTUM® Clamping bow light
XL 100 / XL 120

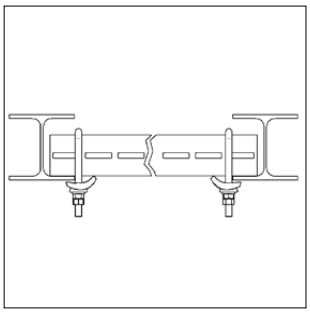

Specification:

For profile rail type:	XL 80, XL 100 or XL 120
Application area:	for mounting of steel profile rail on girder
Delivery time:	on request

Set consisting of:

U-bolt	1 pc.
CENTUM® tensioning bracket	1 pc.
Nuts M12	4 pcs.
washer	2 pcs.

Technical data:

Material:	steel
Material type:	S235JR
Surface:	
U-bolt:	zinc-nickel
CENTUM® tensioning bracket	Galvanized
Nuts M12	Galvanized
washer	Galvanized

Remark: max. loads refer according to a clamping bow set. Please notice max. loads of CENTUM® profile rails

Identification	Thread U-bolt	max. load F_X [kN]	F_Y [kN]	F_Z [kN]	tightening torque [Nm]	max. clamping strength [mm]	Weight [kg/pc.]	Packing [pc.]	Part-No.
CENTUM® Clamping bow XL 80	M12	3,0	3,0	10,0	25	6 - 25	1,30	1	1660801011
CENTUM® Clamping bow XL 100 / 120	M12	3,0	3,0	10,0	25	6 - 25	1,46	1	1661001011

CENTUM® Spacer plate for clamping bows

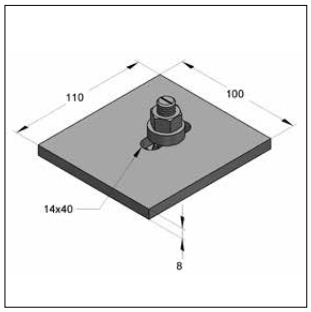

CENTUM® Spacer plate
for clamping bows
T-bolt, with steel disk

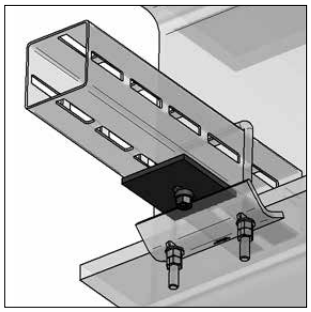

CENTUM® spacer plate combined
with CENTUM® clamping bow

Specification:

Application area:	to raise clamping thickness of CENTUM clamping bow
Mounting instruction:	with space plate clamping thickness can be increased by 8 mm
Required accessory:	T-bolt, with steel disk, M12/40
Delivery time:	on request

Technical data:

Material:	steel
Surface:	hot-dip galvanized

Identification	Dimension Width [mm]	Length [mm]	Thickness s [mm]	elongated hole [mm]	Weight [kg/pc.]	Packing [pc.]	Part-No.
CENTUM® Spacer plate	100	110	8	14x40	0,830	1	1660011030

CENTUM® Clamping shoe

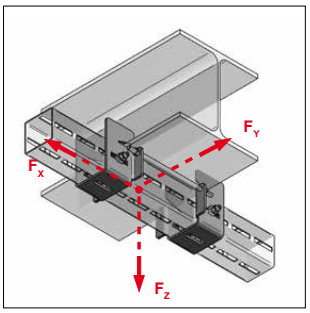

CENTUM® Clamping shoe mounted

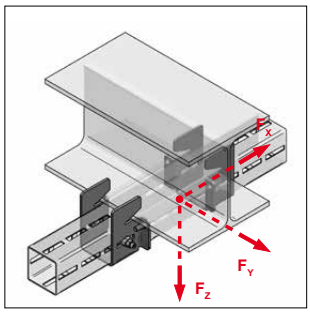

CENTUM® Clamping shoe mounted

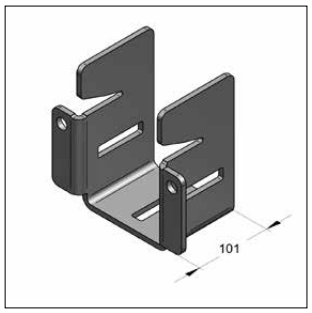

CENTUM® Clamping shoe single

Specification:

Application area: Attaching CENTUM® profiles to steel girder
Installation advise: Evenly tightening of threaded rods with 15 Nm
Torque for CENTUM® T-lock head 120 Nm

Scope of delivery: Sold in pairs

Technical data:

Material: steel
Material type: S235JR
Surface: hot-dip galvanized
Safety factor: 1,54

Identification	Profile type	Clamping thickness Flange [mm]	min. Clamping range Flange [mm]	max. web thickness Girder [mm]	max. load F_x [kN]	max. load F_y [kN]	max. load F_z [kN]	Weight [kg/set]	Packing [set]	Part-No.
CENTUM® Clamping shoe S	XL 100	5-10	82*	10	20,0	4,2	22,5	4,24	1	1661002010
CENTUM® Clamping shoe M	XL 100	8-15	100	10	20,0	4,2	22,5	4,39	1	1661003010
CENTUM® Clamping shoe L	XL 100	13-20	140	20	20,0	4,2	22,5	4,56	1	1661004010
CENTUM® Clamping shoe XL	XL 100	19-30	180	40	20,0	4,2	22,5	5,20	1	1661005010
CENTUM® Clamping shoe S	XL 120	5-10	82*	10	20,0	4,2	22,5	4,77	1	1661202010
CENTUM® Clamping shoe M	XL 120	8-15	100	10	20,0	4,2	22,5	4,93	1	1661203010
CENTUM® Clamping shoe L	XL 120	13-20	140	20	20,0	4,2	22,5	5,08	1	1661204010
CENTUM® Clamping shoe XL	XL 120	19-30	180	40	20,0	4,2	22,5	5,80	1	1661205010
CENTUM® Clamping shoe L	XL 200	13-20	140	20	20,0	4,2	22,5	7,22	1	1662004010
CENTUM® Clamping shoe XL	XL 200	19-30	180	40	20,0	4,2	22,5	8,21	1	1662005010

The min. clamping width of flange with 82mm only for IPE girder, with 91mm only for IPEa girder, for other types of girder the min. clamping width is 100mm.

CENTUM® clamping shoe accessory -set

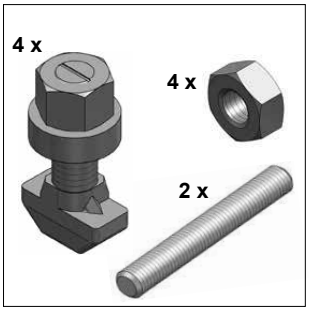

CENTUM® clamping shoe accessory

Specification:

Application area: fixing accessories for Centum clamping shoe
Content: 4 x T-lock head, toothed M12/40
2 x profile rail M12
4 x nut M12

Technical data:

Material: steel
Surface
T-lock head: zinc-nickel
Threaded rods & nuts: galvanized

Identification	Threaded rod lenght [mm]	clamping range flange [mm]	Weight [kg/Set]	Packing [Set]	Artikel-Nr.
CENTUM® clamping shoe accessory 160	160	82 - 160	0,780	1	1660019160
CENTUM® clamping shoe accessory 300	300	160 - 300	0,986	1	1660019300

CENTUM® Girder clamping XL 80 and XL 100

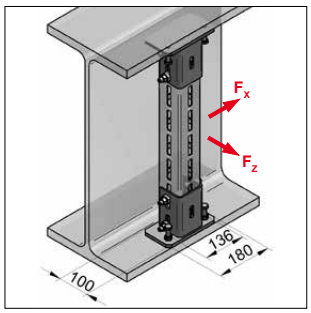

CENTUM® Girder clamping XL 80

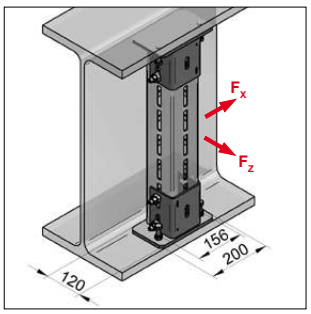

CENTUM® Girder clamping XL 100

Specification:

For profile type: XL 80 and XL 100
delivery in pairs

Recommended accessory: - 4 x CENTUM T-lock head M12 x 40
(profile mounting to Girder clamping)

Scope of delivery:
- 2 x CENTUM girder clamping
- 2 x nuts M12
- 2 x hexagon screws with cup point

Technical data:

Material: steel
Material type: S235JR
Surface: zinc-nickel

Remark: No discharge of moments at transverse fixation, e.g. by consoles or self-supporting pipes. Kipping loads or moments must be accepted by additional reinforcements or supports. Only for reclined loads and/or sliding bearing guided pipes.

Identification	Profile type	Tightening torque eye screw [Nm]	SW	max. load Pulling force F_x [kN]	max. load Shear F_z [kN]	Weight [kg/set]	Packing [set]	Part-No.
CENTUM® Girder clamping	XL 80	40	19	8	8	5,40	1	1620806000/zn
CENTUM® Girder clamping	XL 100	40	19	8	8	6,90	1	1621006000/zn

ⓘ No quadratic overlay of F2 and Fx.
Important: Only one direction of force, moments = 0

CENTUM® Clamping claw - type AF

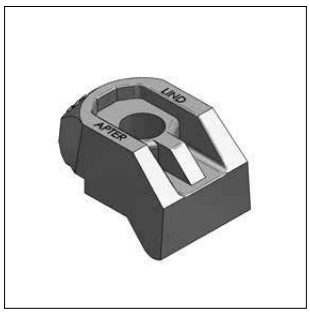

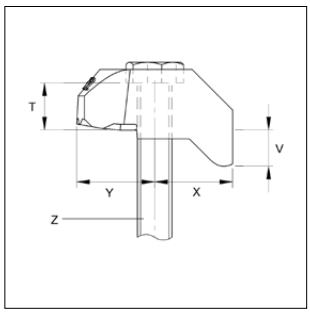

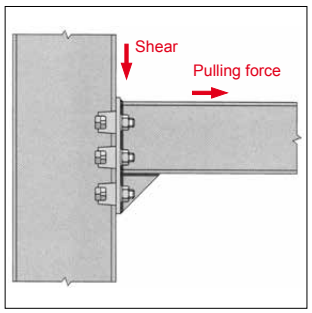

Clamping Claw AF

Specification:

Application:
- flange up to inclination of 10°
- absorption of high shearing forces by clamping girder fixation at vertical girder

Mounting instruction: cam height V = min./max. clamping thickness
washers for height-adjustment of flange available on request

Delivery time: on request

Technical data:

Material: cast iron
Surface: hot-dip galvanized
Safety factor: 5:1 (tensile)
2:1 (shear)

Required accessory:

hexagon bolt h.-d. galv. FK 8.8 / threaded rod
see on page 4/11.
washers DIN EN ISO 7089 h.-d. galv.
hexagon nuts h.-d. galv.

* in conjunction with property class 8.8
** for shear force value is valid for two screws couplings
*** on request

Typ	Dimensions Y [mm]	X [mm]	T [mm]	V [mm]	Width [mm]	needed screw Z	Property class screw	Tightening torque [Nm]	max. load* Pulling force [kN]	Shear** Girder coated [kN]	Shear** Girder galvan. [kN]	Weight [kg/pc.]	Packing [pc.]	Part-No.
AF M12	29,0	27,0	17,0	12,5 (medium)	39,0	M12	8.8	90	8,5	3,4	3,9	0,244	1	1660004012
AF M16	35,0	37,0	22,0	15,0 (medium)	48,5	M16	8.8	240	16,0	8,0	10,0	0,460	1	1660004016
AF M12 k* **	29,0	27,0	17,0	5,0 (short)	39,0	M12	8.8	90	8,5	3,4	3,9	0,191	1	1660004012/k
AF M16 k* **	35,0	37,0	22,0	8,0 (short)	48,5	M16	8.8	240	16,0	8,0	10,0	0,434	1	1660004016/k

selection chart for clamping claw AF page 1/30.

CENTUM® Washer component AF

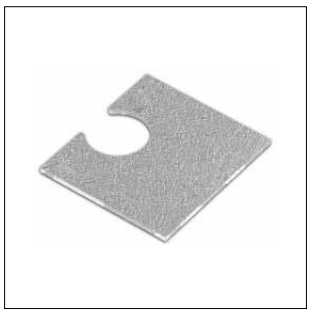

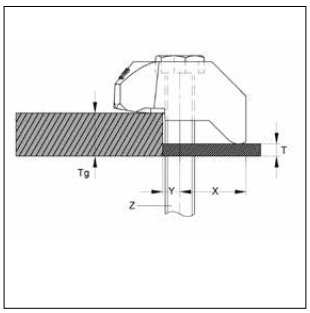

Washer component AF

Specification:

Application: should only be used in combination with clamping claw - type AF

Product feature: for raising clamping thickness, allows assembly at different flange thickness

Delivery time: on request

Installation advise: T = thickness of the washer component
V = cam lift of clamping claw - type AF (see page clamping claw - type AF)
tg = flange thickness
Thickness of washer component is calculated with help of formula: T = tg - V

Technical Data:

Material: spheroidal cast iron

Surface: hot-dip galvanized

Identification	Needed screw Z	Dimension Y [mm]	Dimension X [mm]	Dimension T [mm]	Width [mm]	Weight [kg/pc.]	Packing [pc.]	Part-No.
AF 12 CW	M12	7	33	2	40	0,023	1	0576012
AF 12 P1	M12	7	33	5	40	0,062	1	0576082
AF 12 P2	M12	7	33	10	40	0,111	1	0576112
AF 16 CW	M16	8	40	2	50	0,035	1	0576016
AF 16 P1	M16	8	42	5	52	0,097	1	0576114
AF 16 P2	M16	8	42	10	52	0,172	1	0576116

selection chart for clamping claw AF page 1/29

Selection chart for clamping claw Typ AF with different flange thicknesses in parallel flange Straps:

	M12				M16			
flange thickness	clamping claw Typ AF	Washer AF CW	Washer AF P1	Washer AF P2	clamping claw Typ AF	Washer AF CW	Washer AF P1	Washer AF P2
[mm]	[cam height V]	[pc.]	[pc.]	[pc.]	[cam height V]	[pc.]	[pc.]	[pc.]
5	short*	-	-	-	-	-	-	-
6	short*	-	-	-	-	-	-	-
7	short*	1	-	-	short*	-	-	-
8	short*	1	-	-	short*	-	-	-
9	short*	2	-	-	short*	-	-	-
10	short*	-	1	-	short*	1	-	-
11	short*	3	-	-	short*	1	-	-
12	short*	1	1	-	short*	2	-	-
13	medium	-	-	-	short*	-	1	-
14	medium	1	-	-	short*	3	-	-
15	short*	-	-	1	medium	-	-	-
16	medium	2	-	-	medium	-	-	-
17	medium	-	1	-	medium	1	-	-
18	medium	-	1	-	short*	-	-	1
19	medium	1	1	-	medium	-	1	-
20	short*	-	1	1	medium	-	1	-
21	medium	2	1	-	medium	-	1	-
22	medium	2	1	-	medium	1	1	-
23	medium	-	-	1	medium	1	1	-
24	medium	1	-	1	medium	-	-	1
25	short*	-	-	2	medium	-	-	1
26	medium	2	-	1	medium	-	-	1
27	medium	-	1	1	medium	1	-	1
28	medium	-	1	1	short*	-	-	2
29	medium	1	1	1	medium	-	1	1
30	short*	-	1	2	medium	-	1	1
31	medium	2	1	1	medium	-	1	1
32	medium	-	-	2	medium	1	1	1
33	medium	-	-	2	medium	1	1	1
34	medium	1	-	2	medium	-	-	2
35	short*	-	-	3	medium	-	-	2

*clamping claw AF with short cam height on request available.

CENTUM® Clamping claw - type LR

Clamping claw LR

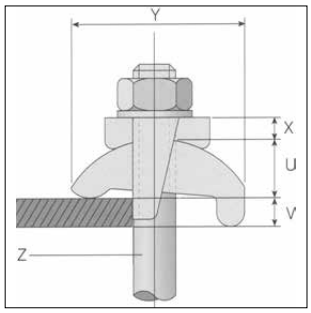

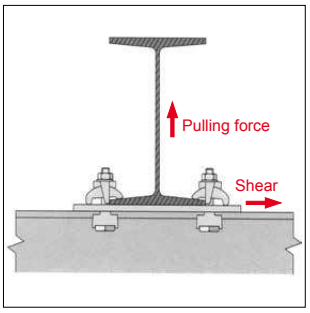

Specification:

Application:
- girder with parallel and up to 15° inclined flanges.
- Horizontal connection of girder fixation at girder.

Delivery time: on request

Technical data:

Material: spherulitic cast iron
Surface: galvanized
Safety factor: 5:1

Required accessory:

1 x hexagon bolt h.-d. galv. FK 8.8 / threaded rod
1 x washer DIN EN ISO 7089 h.-d. galv.
1 x hexagon nut h.-d. galv.

[1] checked for dynamic loads

[2] larger flange thickness can be clamped with washer components (P1 and P2 on request)

[3] in conjunction with property class 8.8

[4] for shear force value is valid for two screws couplings

Typ	Dimensions					needed	Tightening	max. load[3]		Weight	Packing	Part-No.
	Y [mm]	U [mm]	X [mm]	V[2] [mm]	Width [mm]	Screw Z	torque [Nm]	Pulling force [kN]	Shear[4] [kN]	[kg/pc.]	[pc.]	
LR M12	56,0	18,5	7,0	3-12	39,0	M12	69	4,5	0,9	0,172	1	1660003012
LR M16[1]	67,0	22,5	8,0	3-16	46,0	M16	147	8,5	1,7	0,310	1	1660003016

CENTUM® Clamping claw - type CF

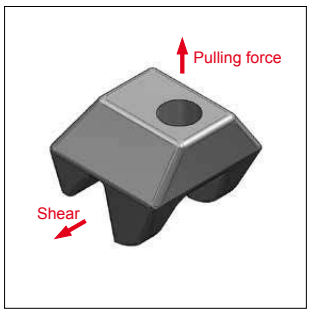

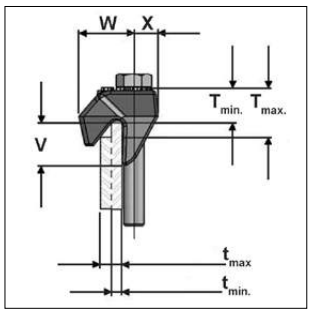

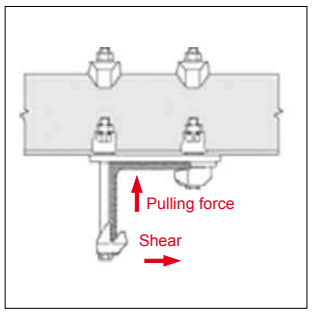

Clamping claw CF

Specification:

Application:
- flange-edges of girder, U-profiles, angle-profiles
- absorption of high shearing forces by clamping at the vertical girder

Delivery time: on request

Technical data:

Material: cast iron
Surface: hot-dip galvanized
Safety factor: 2,0

Required accessory:

1 x hexagon bolt h.-d. galv. FK 8.8 / threaded rod
1 x washer DIN EN ISO 7089 h.-d. galv.
1 x hexagon nut h.-d. galv.

* in conjunction with property class 8.8
** for shear force value is valid for two screws couplings

Type	Dimensions X	V	W	Width	min.-max. clamping size t	min.-max. projection T	Tightening torque	max. load Pulling force*	Shear**	Weight	Packing	Part-No.
	[mm]	[mm]	[mm]	[mm]	[mm]	[mm]	[Nm]	[kN]	[kN]	[kg/pc.]	[pc.]	
CF M12	14	25	32	46	6-13	21-29	90	8,5	3,9	0,222	1	1660002012
CF M16	18	32	44	56	8-16	25-33	240	16,0	10,0	0,428	1	1660002016

CENTUM® Wall- and roof bushing

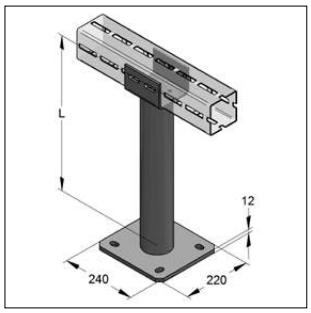

Roof bushing XL 120
(suitable also for XL 100 and
XL 200) e.g. part-no. 9993233

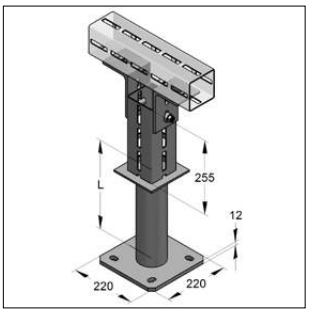

Roof bushing variable
e.g. part-no. 9992883

Roof bushing XL 120

Specification:

Applications area:	wall- and roof bushing to be mounted and sealed on carrying ground. Insulation of facade or roof afterwards. The round pipe shall be insulated by means of insulation foam to minimize thermal bridges. Various adaptions of CENTUM- and profile channels on request.
Delivery time:	demand on request
Remark:	for further informations regarding dimensions, loads and assembly please contact our application engineering.

Technical data:

Material:	steel
Material type:	S235JR
Surface:	hot-dip galv.

Rooftop holder for rooftop constructions

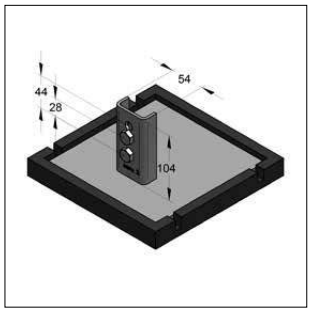

Rooftop holder complete

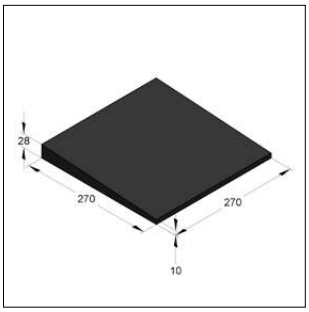

Rubber wedge 4°

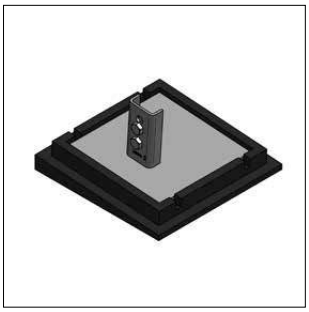

Rooftop holder complete with
rubber wedge underneath

Specification:

Profile rail type:	45/26, 45/45, 45/52, 45/60, 45/75, 45/90, 45/120
Applications area:	for profile channel constructions onto rooftop
Installation advise:	position rooftop holder on rubber pad. For compensation of possible roof pitch place rubber wedge (4°) below rubber pad
Separation fleece:	recommended for use on PVC membrane roof surfaces to prevent migration of plasticizer
Scope of delivery (Rooftop holder complete):	1 x rubber pad 1 x holder 2 x hexagon screws M12 x 25 1 x 2-hole tooth plate

* Permissible floor load has to be checked by the customer.
Wind and snow loads must be considered separately.

Technical data:

Material holder:	steel
Material type:	S235JR
Surface screw :	zinc-nickel
Surface holder::	hot-dip galv.
Material rubber pad:	EPDM
separation fleece:	polyester
according to building material class DIN 4102:	B2
temperature resistance separation fleece:	-60°C up to +220°C
safety factor (related to component):	1,54

Identification	Dimension steel plate [mm]	Dimension rubber pad / seperation fleece [mm]	Pressure load* [kN]	Weight [kg/pc.]	Packing [pcs.]	Part-No.
Rooftop holder complete	200x200x6	225x225x17	4,0	3,71	2	08197500
Rooftop holder rubber wedge	-	270x270x28/10	4,0	1,73	1	08197598
Rooftop holder separation fleece	-	270x270x3,5	-	0,04	1	0819759701

Load values CENTUM® profile rails

	XL 80				XL 100				XL 120				XL 120s				XL 200			
bearing spacing	single load 1xF1	double load 2xF2	three loads 3xF3	dis-tributed load q	single load 1xF1	double load 2xF2	three loads 3xF3	dis-tributed load q	single load 1xF1	double load 2xF2	three loads 3xF3	dis-tributed load q	single load 1xF1	double load 2xF2	three loads 3xF3	dis-tributed load q	single load 1xF1	double load 2xF2	three loads 3xF3	dis-tributed load q
[mm]	[kN]	[kN]	[kN]	[kN/m]	[kN]	[kN]	[kN]	[kN/m]	[kN]	[kN]	[kN]	[kN/m]	[kN]	[kN]	[kN]	[kN/m]	[kN]	[kN]	[kN]	[kN/m]
500	23,03	17,28	11,52	92,12	44,88	33,66	22,44	162,54	73,92	55,44	36,96	254,41	88,71	66,53	44,36	268,32	179,33	129,69	86,46	518,76
750	15,35	11,51	7,68	40,91	29,91	22,43	14,96	79,74	49,26	36,94	24,63	131,34	59,11	44,34	29,56	157,62	119,51	89,63	59,76	318,69
1000	11,50	8,63	5,75	22,99	22,41	16,81	11,21	44,82	36,92	27,69	18,46	73,83	44,30	33,23	22,15	88,60	89,59	67,19	44,80	179,18
1250	9,19	6,89	4,60	14,70	17,91	13,44	8,96	28,66	29,51	22,13	14,76	47,21	35,41	26,56	17,71	56,65	71,63	53,72	35,82	114,60
1500	7,64	5,73	3,82	10,19	14,91	11,18	7,46	19,88	24,56	18,42	12,28	32,75	29,48	22,11	14,74	39,30	59,64	44,73	29,82	79,52
1750	6,54	4,91	3,27	7,47	12,76	9,57	6,38	14,58	21,03	15,77	10,52	24,03	25,23	18,93	12,62	28,84	51,08	38,31	25,54	58,37
2000	5,71	4,28	2,86	5,71	11,15	8,36	5,58	11,15	18,37	13,78	9,19	18,37	22,05	16,54	11,03	22,05	44,65	33,49	22,33	44,65
2250	5,06	3,73	2,53	4,50	9,89	7,42	4,95	8,79	16,30	12,23	8,15	14,49	19,56	14,67	9,78	17,39	39,64	29,73	19,82	35,24
2500	4,55	3,01	2,16	3,28	8,88	6,66	4,44	7,11	14,64	10,98	7,32	11,72	17,57	13,18	8,79	14,06	35,63	26,72	17,82	28,50
2750	4,12	2,47	1,78	2,45	8,05	6,04	4,03	5,86	13,28	9,96	6,64	9,66	15,94	11,96	7,97	11,59	32,34	24,26	16,17	23,52
3000	3,52	2,07	1,48	1,88	7,36	5,08	3,64	4,62	12,15	9,11	6,08	8,10	14,58	10,93	7,29	9,72	29,60	22,20	14,80	19,73
3250	2,97	1,75	1,25	1,47	6,78	4,31	3,09	3,61	11,19	8,39	5,60	6,89	13,42	10,07	6,71	8,26	27,27	20,46	13,64	16,79
3500	2,54	1,49	1,07	1,16	6,27	3,69	2,65	2,88	10,36	7,35	5,18	5,73	12,43	8,82	6,22	6,87	25,28	18,96	12,64	14,45
3750	2,19	1,29	0,93	0,94	5,44	3,20	2,29	2,32	9,64	6,37	4,57	4,63	11,56	7,65	5,49	5,56	23,54	17,66	11,77	12,56
4000	1,90	1,12	0,80	0,76	4,75	2,79	2,00	1,90	9,01	5,57	4,00	3,80	10,81	6,68	4,80	4,56	22,03	16,52	11,02	11,02
4250	1,66	0,98	0,70	0,63	4,17	2,45	1,76	1,57	8,35	4,90	3,52	3,15	10,02	5,88	4,22	3,78	20,68	15,51	10,34	9,73
4500	1,46	0,86	0,62	0,52	3,68	2,16	1,55	1,31	7,40	4,34	3,12	2,63	8,87	5,21	3,74	3,16	19,48	14,61	9,74	8,66
4750	1,29	0,76	0,54	0,44	3,27	1,92	1,38	1,10	6,59	3,87	2,78	2,22	7,90	4,64	3,33	2,66	18,41	13,81	9,21	7,75
5000	1,14	0,67	0,48	0,37	2,91	1,71	1,23	0,94	5,89	3,46	2,48	1,89	7,07	4,15	2,98	2,26	17,44	13,08	8,72	6,98
5250	1,01	0,59	0,43	0,31	2,61	1,53	1,10	0,80	5,29	3,11	2,23	1,62	6,34	3,73	2,67	1,94	16,56	12,42	8,28	6,31
5500	0,89	0,53	0,38	0,26	2,34	1,37	0,99	0,68	4,77	2,80	2,01	1,39	5,72	3,36	2,41	1,67	15,76	11,82	7,88	5,73
5750	0,79	0,47	0,34	0,22	2,10	1,24	0,89	0,59	4,31	2,53	1,82	1,20	5,16	3,03	2,18	1,44	15,03	10,82	7,52	5,13
6000	0,71	0,42	0,30	0,19	1,89	1,11	0,80	0,51	3,90	2,29	1,65	1,04	4,68	2,75	1,97	1,25	14,35	9,88	7,09	4,49
6250	-	-	-	-	-	-	-	-	-	-	-	-	-	-	-	-	13,73	9,05	6,50	3,95
6500	-	-	-	-	-	-	-	-	-	-	-	-	-	-	-	-	13,15	8,32	5,97	3,49
6750	-	-	-	-	-	-	-	-	-	-	-	-	-	-	-	-	12,61	7,66	5,50	3,10
7000	-	-	-	-	-	-	-	-	-	-	-	-	-	-	-	-	12,04	7,07	5,07	2,76
7250	-	-	-	-	-	-	-	-	-	-	-	-	-	-	-	-	11,14	6,54	4,69	2,46
7500	-	-	-	-	-	-	-	-	-	-	-	-	-	-	-	-	10,32	6,06	4,35	2,20
7750	-	-	-	-	-	-	-	-	-	-	-	-	-	-	-	-	9,57	5,62	4,03	1,98
8000	-	-	-	-	-	-	-	-	-	-	-	-	-	-	-	-	8,89	5,22	3,75	1,78

max. bending $f_{zul.}$ = L/200 γ = 1,54 Safety Elastic limit f_y = 275 N/mm²; E-Modul 210.000 N/mm²

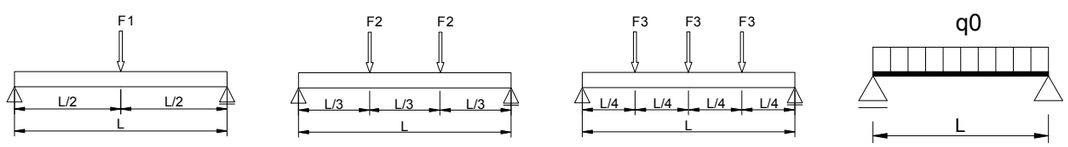

Phone +49 7944 64-0
Fax +49 7944 64-37

MEFA-surfaces classified by corrosive categories according to DIN EN ISO 12944 and DIN EN ISO 14713

DIN EN ISO 12944/ DIN EN ISO 14713
Coatings/ galvanized parts

Corrosive category	Corrosion load	Environment inside (example)	Environment outside (example)	Possible surfaces steel
C1	minor / very low	heated buildings with neutral atmosphere e.g. offices, stores, schools, hotels	non	galvanized, pre-galvanized
C2	small / low	unheated buildings, condensate can occur e.g. stocks, gyms	atmosphere with little pollution	galvanized, pre-galvanized
C3	moderate / medium	production rooms with high humidity and polution e.g. food productions, laundries, breweries, dairies	urban and industrial atmosphere, moderate pollution by sulphur dioxide, coastal areas with little salt load	**TSP®-3 Zinc-Nickel, hot-dip galvanized**
C4	strong / high	chemical plants, swimming pools, boathouses over sea	industrial and coastal areas with moderate salt load	**TSP®-5 applicable**
C5-I	very strong (industry) / very high	buildings or areas with almost constant condensation and with heavy contamination	industrial areas with high humidity and aggressive atmosphere	**TSP® 5**
C5-M/CX	very strong (sea) / extreme	buildings or areas with almost constant condensation and with heavy contamination	coastal and offshore areas with high salt load	**TSP® 5**

Top-Surface-Protection (TSP®)

Phone +49 7944 64-0
Fax +49 7944 64-37

CENTUM®-Connection part 1: T-lock head

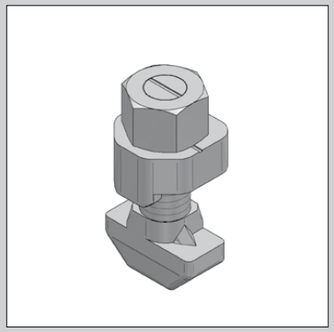

T-lock head,
Lock washer

M12 x 40
part-no. 1610011000

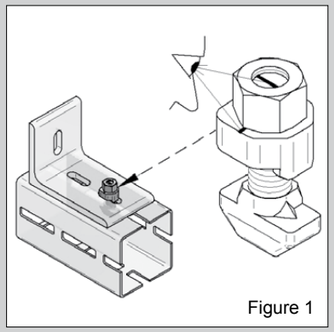

Figure 1

Positioning:

Locate T-lock head into mounting part like shown in Figure 1.

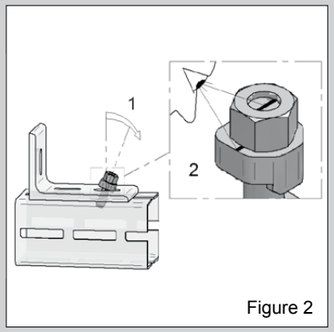

Figure 2

Adjustment:

Turn T-lock head around 90 degrees, so that T-lock bolt stands diagonally to long hole (see 1).

Tilt forward T-lock head, so that guide wedge of Lock washer snaps in long hole (see 2).

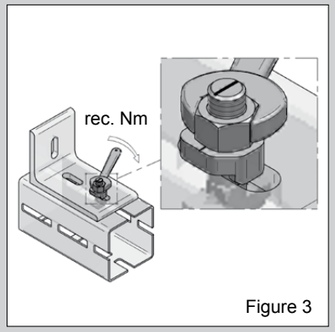

Figure 3

Fixation:

Tighten tilted T-lock with 90 Nm (XL 80) or 120 Nm (from XL 100).
T-lock head after dismounting non-reusable.

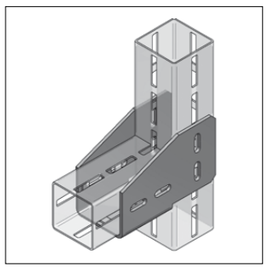

CENTUM® Angle-shoe XL

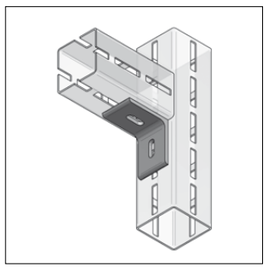

CENTUM® 2-hole angle (XL 80)

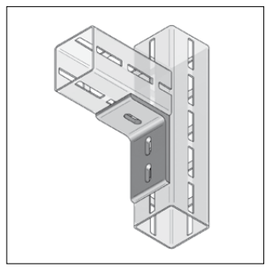

CENTUM® 3-hole angle

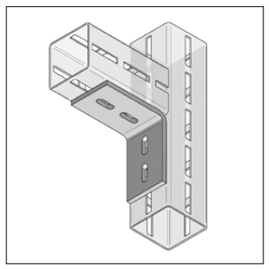

CENTUM® 4-hole angle

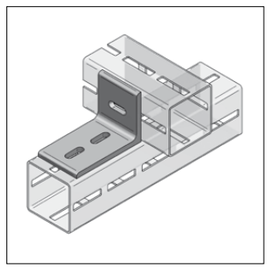

CENTUM® 3-hole angle horizontal

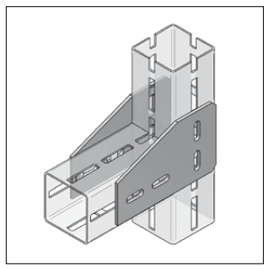

CENTUM® Corner plates

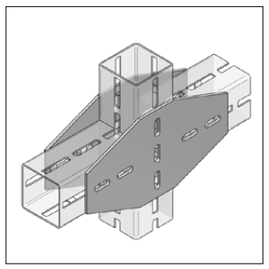

CENTUM® Cross plates

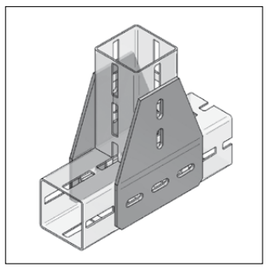

CENTUM® T-plates

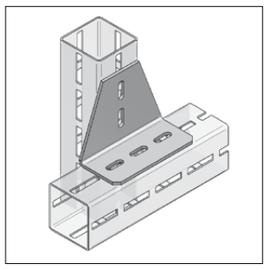

CENTUM® T-plate, angled

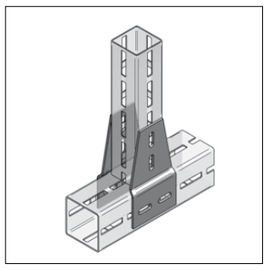

CENTUM® T-plate cranked sym.

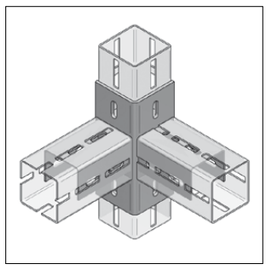

CENTUM® Angle coupler 90°

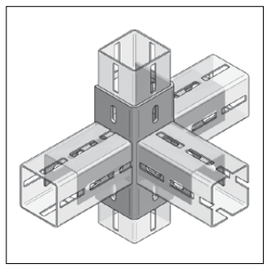

CENTUM® Angle coupler 180°

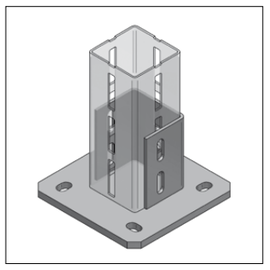

CENTUM® Holder

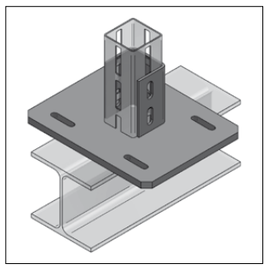

CENTUM® Adaptor
vertical/ horizontal

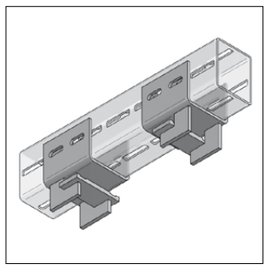

CENTUM® Sliding base, hanging

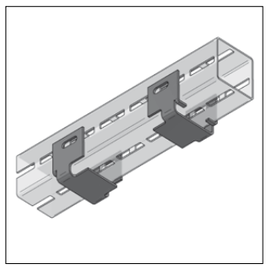

CENTUM® Sliding base,
hanging light

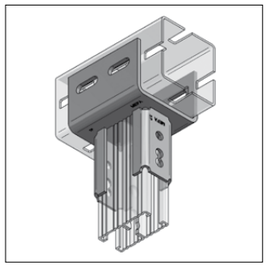

CENTUM® Adaptor
vertical/ horizontal

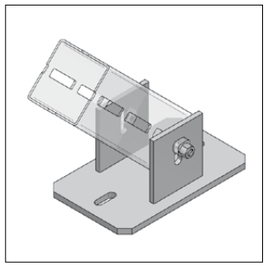

CENTUM® Joint holder
vertical/ horizontal

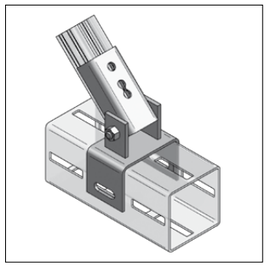

Joint connection

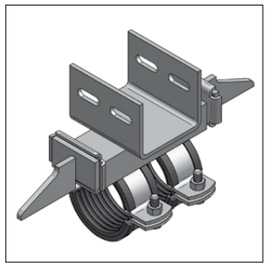

Fixpoint type A with CENTUM®
Massive connector

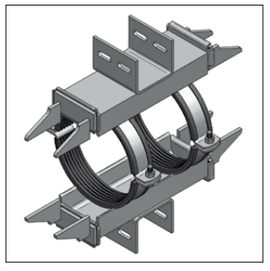

Fixpoint type B with CENTUM®
Massive connector

CENTUM®-Connection part 2: T-lock head or T-bolt

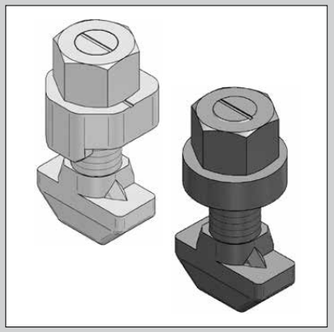

**T-lock head,
Lock washer**

**M12 x 40
part-no. 1610011000**

**T-bolt,
with steel disk**

**M12 x 40
part-no. 1610012000**

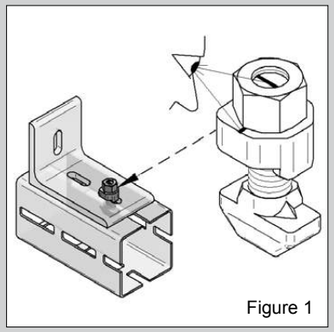

Figure 1

Positioning:

Locate T-lock head into mounting part like shown in Figure 1.

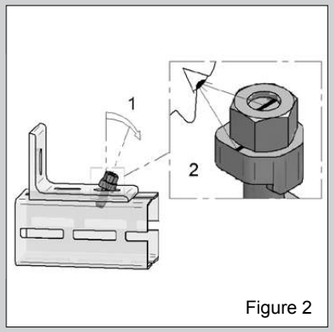

Figure 2

Adjustment:

Turn T-lock head around 90 degrees, so that T-lock bolt stands diagonally to long hole (see 1).

Tilt forward T-lock head, so that guide wedge of Lock washer snaps in long hole (see 2).

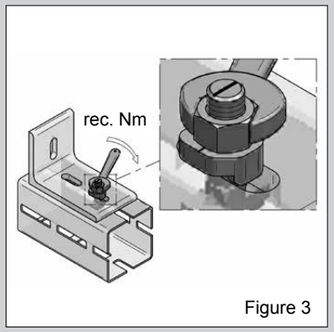

Figure 3

Fixation:

Tighten tilted T-lock with 90 Nm (XL 80) or 120 Nm (from XL 100).
T-lock head after dismounting non-reusable.

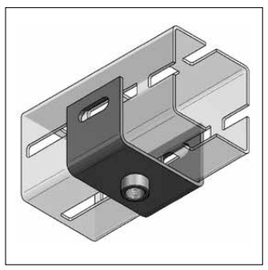

CENTUM® Thread connector

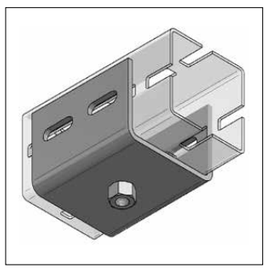

CENTUM® Massive connector

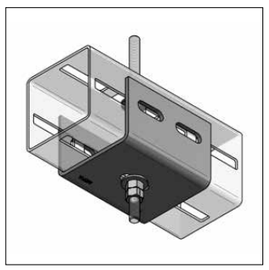

CENTUM® Wall connector

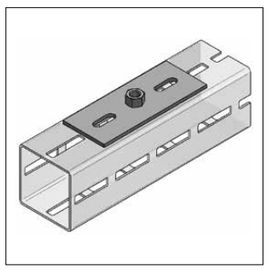

CENTUM® Base plates

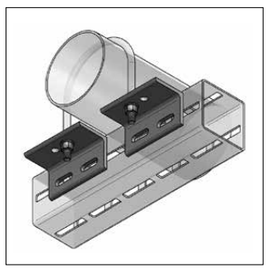

CENTUM® Pipe holder

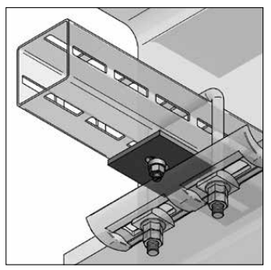

CENTUM® spacer plate combined with CENTUM® clamping bow

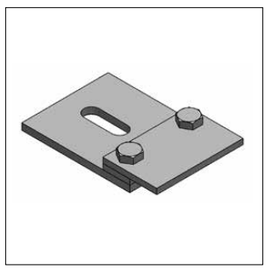

CENTUM® Z-pressure pad

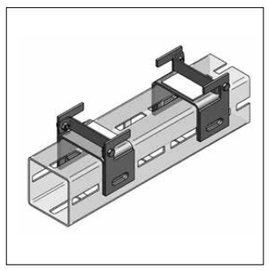

CENTUM® Sliding base, standing with lift lock

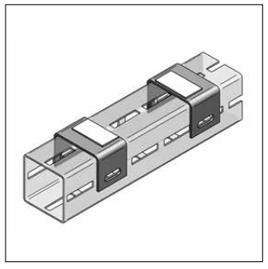

CENTUM® Sliding base, standing without lift lock

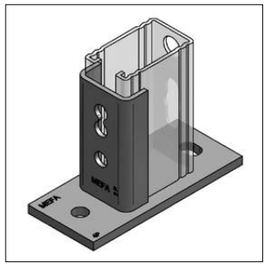

Connecting parts
Rail system 45

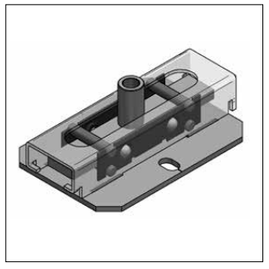

Slider/Roller bearing

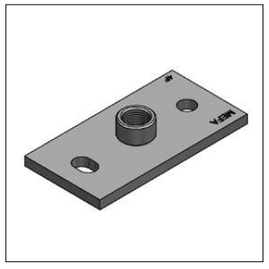

Base plates

Pipe supports, sliding sledges and roller supports

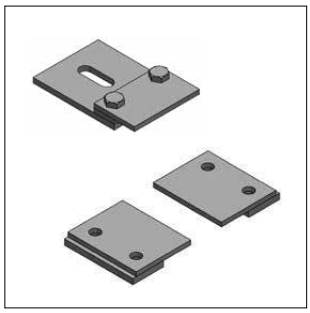

Pressure pad
Page 2/2

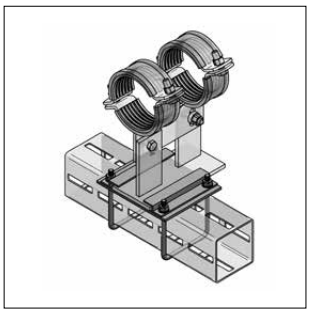

CENTUM Z-pressure pad
Set with U-bolt
Page 2/3

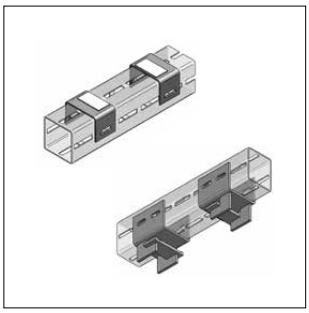

CENTUM Sliding base
Page 2/4

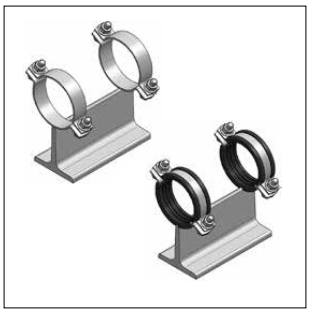

Sliding support T
Page 2/6

Sliding support HV, 1 pipe clamp
Page 2/8

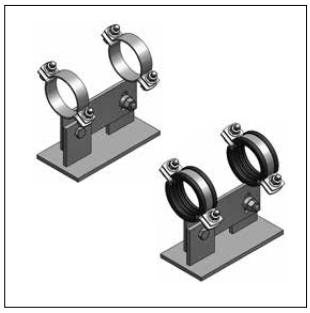

Sliding support HV, 2 pipe clamps
Page 2/12

Sliding sledge
Page 2/24

Sliding sledge HV
Page 2/27

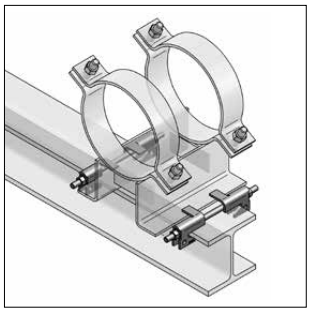

Guiding Clamp-Set
Page 2/29

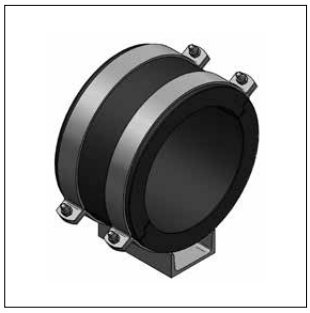

Polar plus sliding sledge
Page 2/30

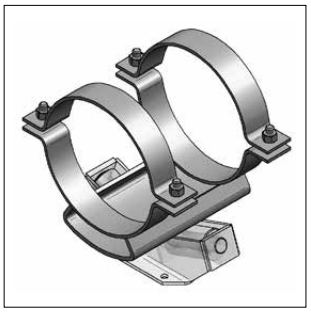

Insulation-saddle for roller-bearings
Page 2/31

Roller bearings
Page 2/33

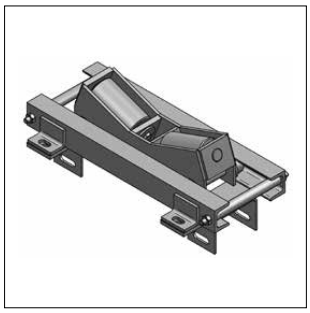

Double-roller bearing holder with
CENTUM® connection
Page 2/36

Component safety concept: According DIN EN 1991-1

Global safety coefficient γ	**Safety for impact**
The evaluation of global safety coefficient for the value	Safety tare weight γ_G = 1,35
of impact is based on a ratio of 2/3 of tare weight and	Safety working load γ_Q = 1,50
1/3 of working load.	
$\gamma = (2/3\ \gamma_G + 1/3\ \gamma_Q) \times \gamma_Z = (2/3x1,35 + 1/3x1,50) \times 1,1 = 1,54$	
Exceptions	**Safety for resistance**
CENTUM screwing acc. RAL GZ 655-D γ = 2,0	Safety load resistance γ_Z = 1,10

Tightening torque of locking screws on pipe clamps see chapter 06

02

CENTUM® Z-pressure pad

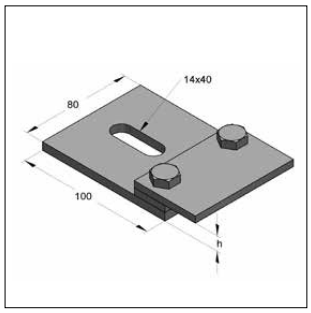

CENTUM® Z-pressure pad
clamping strength 11 mm

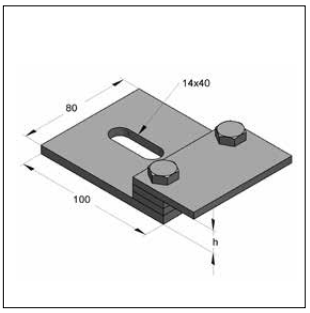

CENTUM® Z-pressure pad
clamping strength 16 mm

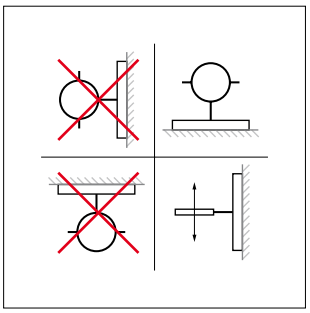

Mounting recommendation

Specification:

For profile type:	XL100, XL120 and XL 200
	set of 2 pcs.
Mounting instruction:	suitable for standing assembly, only
Required accessory:	sliding stripe PA 6
	T-bolt with steel disk, M12/40

Technical data:

Material:	steel
Material type:	S235JRG
Surface:	zinc-nickel

Identification	Length [mm]	Width [mm]	clamping strength h [mm]	Thickness [mm]	elongated hole-Ø [mm]	Weight [kg/set]	Packing [set]	Part-No.
CENTUM® Z-pressure pad s11	100	80	11	6	14 x 40	1,31	1	1650015011
CENTUM® Z-pressure pad s16	100	80	16	6	14 x 40	1,48	1	1650015016

Fixation plate for sliding sledge

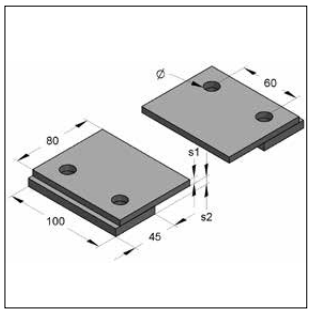

Fixation plate for sliding sledge

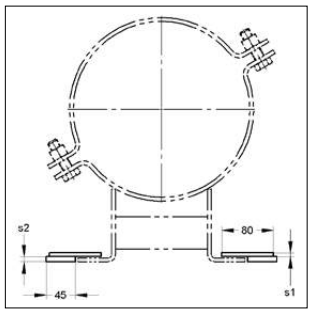

Please quote
R raw
G galvanized
F hot-dip galvanized
108 b ☐ b 0219

Technical data:

Material:	steel
Material type:	S235JR
Surface:	raw, galvanized
	hot-dip galvanized
Delivery time:	on request / order in pairs

Identification	Size	connection	OD [mm]	s1 [mm]	s2 [mm]	Weight [kg/Pc.]	Packing [Pc.]	Part-No.
Fixation plate	**1**	with hole	14	6	8	0,65	1	147 b ☐ 1
Fixation plate	**2**	with hole	18	8	10	0,86	1	147 b ☐ 2
Fixation plate	**3**	with hole	22	8	12	0,93	1	147 b ☐ 3

R raw
G galvanized
F hot-dip galvanized

Phone +49 7944 64-0
MEFA
Fax +49 7944 64-37

CENTUM® Z-pressure pad Set with U-bolt

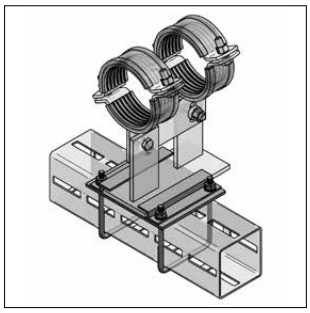

CENTUM® Z-pressure pad Set for sliding sledge and sliding plate with 100 mm width

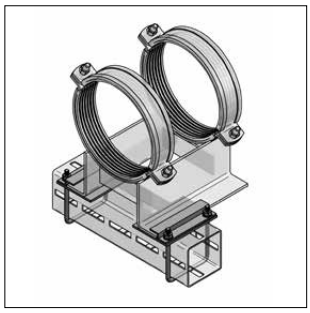

CENTUM® Z-pressure pad Set for sliding sledge and sliding plate above 140 mm width

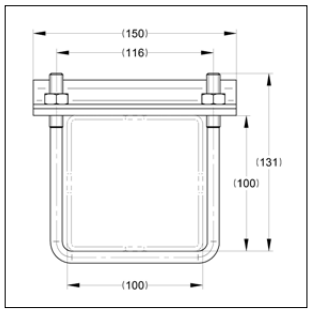

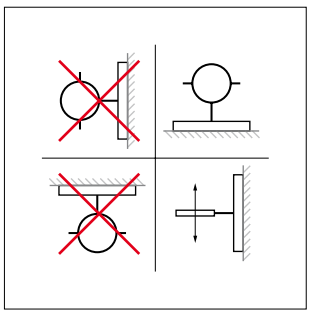

Mounting recommendation

Specification:

Application:	Fixing of sliding element on CENTUM XL 100 or square pipe 100
scope of delivery: (Set for 100 mm)	2 x U-bolt 116/131 M10 2 x Z-pressure pad 150 mm 2-hole 1 x sliding stripe PA6 4-hole (150 x 165 x 5) 4 x nut M10
scope of delivery: (Set above 140 mm)	2 x U-bolt 116/131 M10 2 x Z-pressure pad 150 mm 2-hole 2 x sliding stripe PA6 2-hole (150 x 100 x 5) 4 x nut M10

Technical data:

Material:	steel
Material type:	S235JR
Surface:	
- U-bolt, Z-pressure pad:	zinc-nickel
- nut:	hot-dip galvanized
Material sliding stripe:	PA6
static friction factor:	0,2 - 0,3
sliding friction factor:	0,15 - 0,25
Temperature resistance:	- 30° C up to + 110° C

Identification	for pipe / CENTUM [mm]	max. thickness sliding eleme [mm]	lifting stress / set [kN]	Weight [kg/Set]	Packing [Set]	Part-No.-Nr.
Z-pressure pad Set for sliding sledge with 100 mm width	100 x 100	16	4,5	1,060	1	14799100
Z-pressure pad Set for sliding sledge above 140 mm width	100 x 100	16	4,5	1,090	1	14799140

CENTUM® Sliding stripe

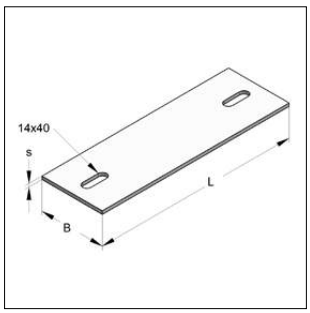

CENTUM® Sliding stripe

Specification:

Product attributes:	improvement of sliding characteristic
Application area:	sliding plates

Technical data:

Material:	polyamide 6
Static friction factor:	0,2 - 0,3
Sliding:	0,15 - 0,25
Thermal load:	- 30 °C up to + 110 °C

Identification	Length L [mm]	Width B [mm]	Thickness s [mm]	elongated hole-Ø [mm]	sliding element width [mm]	Weight [kg/pc.]	Packing [pc.]	Part-No.
Sliding stripe PA 100/5 2-hole	310	100	5	14 x 40	≤ 100	0,172	1	9992458
Sliding stripe PA 100/5 2-hole	355	100	5	14 x 40	≤ 150	0,198	1	9992200
Sliding stripe PA 100/5 2-hole	410	100	5	14 x 40	≤ 200	0,230	1	9992459

CENTUM® Sliding base, hanging

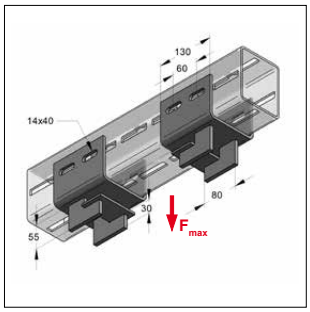

CENTUM® Sliding base, hanging

Specification:

For profile type:	XL 100, XL 120 or XL 200
Required accessory:	T-lock head, toothed, M12/40
Remark:	shipment in pairs
sliding element:	Base plates above 150 mm width Sliding sledge and Sliding support T above 100 mm width

Technical data:

Material Sliding base:	steel
Material type:	S235JR
Surface:	hot-dip galvanized
max. sliding plate thickness:	≤ 16 mm
Material sliding body:	PE - UHMW
static friction factor:	0,2
slide friction factor:	0,15
Temperature resistance:	- 200 °C up to + 80 °C
Safety factor:	1,54

* Loads refer to pair

Identification	Profile type	Alignment	max. load* F_{max} [kN]	Weight [kg/set]	Packing [set]	Part-No.
CENTUM® Sliding base	XL 100 / XL 200	hanging	15,0	4,78	1	1651002001
CENTUM® Sliding base	XL 120	hanging, profile upright	15,0	5,05	1	1651202011

CENTUM® Sliding base, hanging light

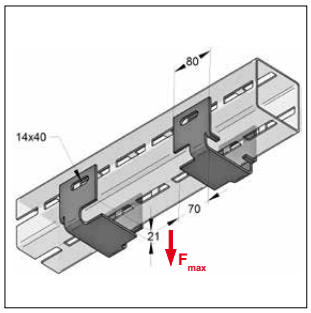

CENTUM® Sliding base, hanging light

Specification:

For profile type:	XL 80, XL 100
Required accessory:	T-lock head, toothed, M12/40
Remark:	shipment in pairs
sliding element:	- with glued Sliding stripes - Base plates, width Sliding sledge and Sliding support T above 100 mm width

Technical data:

Material Sliding base:	steel
Material type:	S235JR
Surface:	hot-dip galvanized
max. sliding plate thickness:	≤ 16 mm
Material sliding body:	PE - UHMW
static friction factor:	0,2
slide friction factor:	0,15
Temperature resistance:	- 200 °C up to + 80 °C
Safety factor:	1,54

* Loads refer to pair

Identification	Profile type	Alignment	max. load* F_{max} [kN]	Weight [kg/set]	Packing [set]	Part-No.
CENTUM® Sliding base, light	XL 80	hanging	5,0	1,13	1	1650804000
CENTUM® Sliding base, light	XL 100	hanging	5,0	1,35	1	1651004000

CENTUM® Sliding base, standing

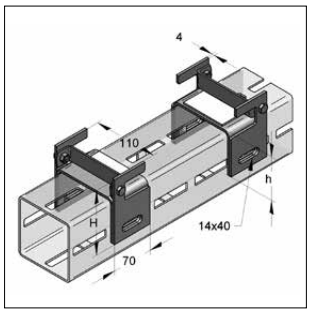

CENTUM® Sliding base, standing with lift lock

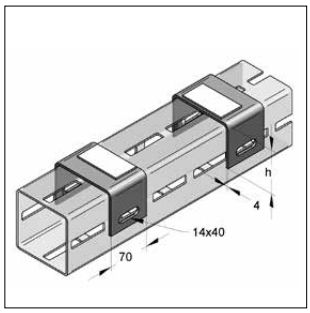

CENTUM® Sliding base, standing without lift lock

Specification:

For profile type:	XL 100, XL 120 and XL 200
Required accessory:	T-lock head, toothed, M12/40 or T-bolt with steel disk, M12/40
Remark:	shipment in pairs

* Loads refer to pair

Technical data:

Material Sliding base:	steel
Material type:	S235JR
Surface:	hot-dip galvanized
max. sliding plate thickness:	≤ 16 mm
Material sliding body:	PE - UHMW
static friction factor:	0,2
slide friction factor:	0,15
Temperature resistance:	- 200 °C up to + 80 °C
Safety factor:	1,54

Identification	Profile type	Alignment	max. load * F_{zul} [kN]	H [mm]	h [mm]	Weight [kg/set]	Packing [set]	Part-No.
Sliding base with lift lock	XL 100 / XL 200	standing	40	110	74	2,13	1	1651001020
Sliding base without lift lock	XL 100 / XL 200	standing	40	-	74	1,07	1	1651001010
Sliding base with lift lock	XL 120	standing, profile upright	40	120	84	2,23	1	1651201050
Sliding base without lift lock	XL 120	standing, profile upright	40	-	84	1,28	1	1651201030

Sliding support T

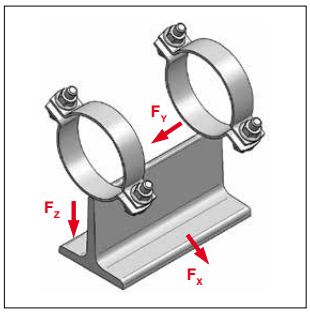

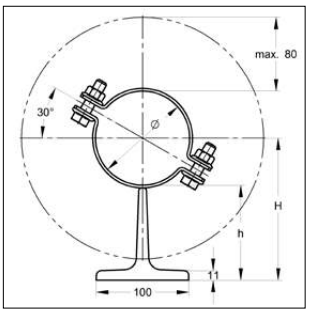

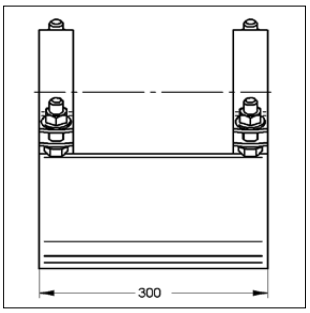

Sliding support T

Please quote
G galvanized
F hot-dip galvanized
108 b b 0219

Specification:

Closure:	hexagon nut / closure-screw
Model:	T-support
OD:	20 up to 219 mm
Delivery time:	on request

Technical data:

Material:	steel
Material type:	S235JR
Surface:	galvanized hot-dip galvanized
Global safety coefficient:	1,54

* F_x = momentfree
Loads at temperature > 100 °C on request

Clamping range [mm]	Material pipe clamp [mm]	Pipe axis H [mm]	Lower edge pipe h [mm]	max. load up to100°C* F_X [kN]	F_Z [kN]	F_Y [kN]	Weight (hot-dip galv.) [kg/pc.]	Packing [pc.]	Part-No.
20 - 23	25 x 3	113 - 115	103	2,00	2,00	1,60	5,64	1	148 a a a 0023
25 - 29	25 x 3	115 - 118	103	2,00	2,00	1,60	5,66	1	148 a a a 0029
30 - 35	25 x 3	118 - 121	103	2,00	2,00	1,60	5,68	1	148 a a a 0035
36 - 40	25 x 3	121 - 123	103	2,00	2,00	1,60	5,70	1	148 a a a 0040
41 - 46	25 x 3	123 - 126	103	2,00	2,00	1,60	5,72	1	148 a a a 0046
48 - 55	25 x 3	127 - 131	103	2,00	2,00	1,60	5,75	1	148 a a a 0055
57 - 61	25 x 3	131 - 134	103	2,00	2,00	1,60	5,78	1	148 a a a 0061
63 - 67	25 x 3	134 - 137	103	2,00	2,00	1,60	5,81	1	148 a a a 0067
70 - 76	25 x 3	138 - 141	103	2,00	2,00	1,60	5,84	1	148 a a a 0076
84 - 90	30 x 3	145 - 148	103	2,00	5,00	1,50	6,09	1	148 a a a 0090
96 - 102	30 x 3	151 - 155	103	2,00	5,00	1,50	6,15	1	148 a a a 0102
108	50 x 5	159	105	2,00	5,80	1,70	7,45	1	148 a a a 0108
114	50 x 5	162	105	2,00	5,80	1,70	7,53	1	148 a a a 0114
133	50 x 5	172	105	2,00	5,80	1,70	7,79	1	148 a a a 0133
140	50 x 5	175	105	2,00	5,80	1,70	7,88	1	148 a a a 0140
159	50 x 5	185	105	2,00	5,80	1,70	8,13	1	148 a a a 0159
168	50 x 5	189	105	2,00	5,80	1,70	8,25	1	148 a a a 0168
194	50 x 5	202	105	2,00	5,80	1,70	8,59	1	148 a a a 0194
219	50 x 5	215	105	2,00	5,80	1,70	8,92	1	148 a a a 0219

G galvanized
F hot-dip galvanized

Sliding support T, sound insulated

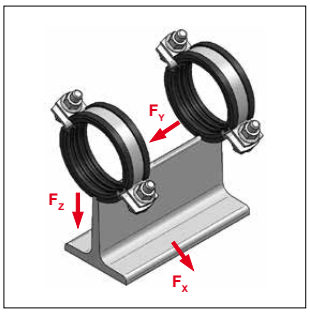

Sliding support, sound insulated

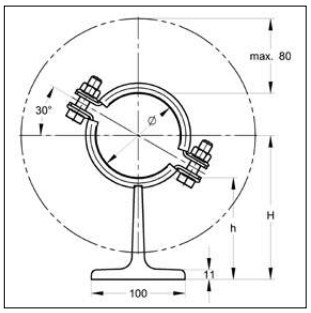

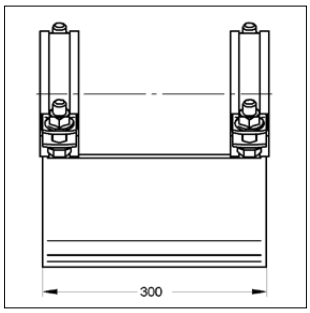

SCHALL-SCHUTZ DIN 4109

Baupc.offklasse ●B2● "Normal entflammbar" nach DIN 4102

Please quote
G galvanized
F hot-dip galvanized
108 b b 0219

02

Specification:

Closure:	Hexagon nut / closure-screw
Model:	T-support
OD:	20 to 219 mm
Sound insulation:	for DIN 4109
Delivery time:	on request

Technical data:

Material:	Steel
Material type:	S235JR
Surface:	galvanized hot-dip galvanized
Sound insulation lining:	Rubber TPE / (Ceramic tile on request)
Temperature resistance:	- 35 °C to + 100 °C
Insulation thickness:	6 mm
Global safety coefficient:	1,54

* F_x = momentfree
Loads at temperature > 100 °C on request

Clamping range [mm]	Material Pipe clamp [mm]	Pipe axis H [mm]	Lower edge pipe h [mm]	max. load up to100°C* F_X [kN]	F_Z [kN]	F_Y [kN]	Weight (hot-dip galv.) [kg/Pc.]	Packing [Pc.]	Part-No.
20 - 25	25 x 3	119 - 122	109	1,60	1,60	1,60	5,71	1	148 a a b 0025
26 - 30	25 x 3	122 - 124	109	1,60	1,60	1,60	5,74	1	148 a a b 0030
31 - 36	25 x 3	124 - 127	109	1,60	1,60	1,60	5,77	1	148 a a b 0036
38 - 45	25 x 3	128 - 132	109	1,60	1,60	1,60	5,80	1	148 a a b 0045
47 - 51	25 x 3	132 - 135	109	1,60	1,60	1,60	5,85	1	148 a a b 0051
53 - 57	25 x 3	135 - 138	109	1,60	1,60	1,60	5,88	1	148 a a b 0057
58 - 64	25 x 3	138 - 141	109	1,60	1,60	1,60	5,91	1	148 a a b 0064
65 - 70	30 x 3	141 - 144	109	1,40	4,80	1,40	6,15	1	148 a a b 0070
72 - 78	30 x 3	145 - 148	109	1,40	4,80	1,40	6,19	1	148 a a b 0078
84 - 90	30 x 3	151 - 155	109	1,40	4,80	1,40	6,27	1	148 a a b 0090
94 - 100	30 x 3	156 - 159	109	1,40	4,80	1,40	6,33	1	148 a a b 0100
102 - 106	30 x 3	160 - 162	109	1,40	4,80	1,40	6,38	1	148 a a b 0106
108	50 x 5	165	111	1,70	5,80	1,70	7,87	1	148 a a b 0108
114	50 x 5	168	111	1,70	5,80	1,70	7,96	1	148 a a b 0114
133	50 x 5	178	111	1,70	5,80	1,70	8,25	1	148 a a b 0133
140	50 x 5	181	111	1,70	5,80	1,70	8,36	1	148 a a b 0140
159	50 x 5	191	111	1,70	5,80	1,70	8,66	1	148 a a b 0159
168	50 x 5	195	111	1,70	5,80	1,70	8,79	1	148 a a b 0168
194	50 x 5	208	111	1,70	5,80	1,70	9,20	1	148 a a b 0194
219	50 x 5	221	111	1,70	5,80	1,70	9,58	1	148 a a b 0219

G galvanized
F hot-dip galvanized

Sliding support T 100/150, HV1 100-125, with 1 pipe clamp

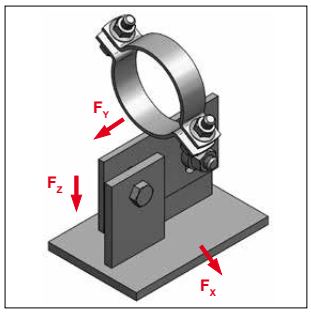

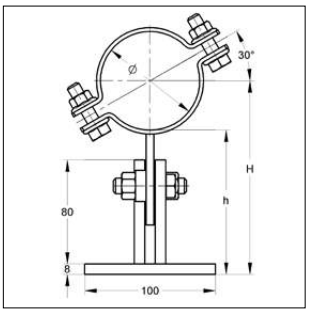

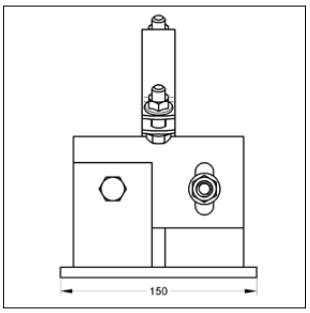

Please quote
G galvanized
F hot-dip galvanized
108 b b 0219

Sliding support T 100/150
HV1 100-125, with 1 pipe clamp

Specification:

Closure:	Hexagon nut / closure-screw
Model:	T-support
Support-width:	100
Support-length:	150
OD:	20 to 219 mm
Height, adjupc.able:	100 to 125 mm
Tightening torque:	80 Nm
Delivery time:	on request

Technical data:

Material:	Steel
Material type:	S235JR
Surface:	galvanized
	hot-dip galvanized
Global safety coefficient:	1,54

* F_x = momentfree
Loads at temperature > 100 °C on request

Clamping range [mm]	Material pipe clamp [mm]	Pipe axis H [mm]	Lower edge Pipe h [mm]	max. load up to100°C* F_X [kN]	F_Z [kN]	F_Y [kN]	Weight (hot-dip galv.) [kg/Pc.]	Packing [Pc.]	Part-No.
20 - 23	25 x 3	109 - 135	98 - 124	0,80	1,00	0,80	2,42	1	144 a a a b 0023
25 - 29	25 x 3	112 - 138	98 - 124	0,80	1,00	0,80	2,43	1	144 a a a b 0029
30 - 35	25 x 3	115 - 141	98 - 124	0,80	1,00	0,80	2,44	1	144 a a a b 0035
36 - 40	25 x 3	118 - 144	98 - 124	0,80	1,00	0,80	2,45	1	144 a a a b 0040
41 - 46	25 x 3	121 - 147	98 - 124	0,80	1,00	0,80	2,46	1	144 a a a b 0046
48 - 55	25 x 3	125 - 151	98 - 124	0,80	1,00	0,80	2,48	1	144 a a a b 0055
57 - 61	25 x 3	128 - 154	98 - 124	0,80	1,00	0,80	2,49	1	144 a a a b 0061
63 - 67	25 x 3	131 - 157	98 - 124	0,80	1,00	0,80	2,50	1	144 a a a b 0067
70 - 76	25 x 3	136 - 162	98 - 124	0,80	1,00	0,80	2,52	1	144 a a a b 0076
84 - 90	30 x 3	143 - 169	98 - 124	0,70	2,50	0,70	2,65	1	144 a a a c 0090
96 - 102	30 x 3	149 - 175	98 - 124	0,70	2,50	0,70	2,67	1	144 a a a c 0102
108	50 x 5	154 - 180	100 - 126	0,90	2,90	0,90	3,33	1	144 a a a g 0108
114	50 x 5	157 - 183	100 - 126	0,90	2,90	0,90	3,37	1	144 a a a g 0114
133	50 x 5	167 - 193	100 - 126	0,90	2,90	0,90	3,49	1	144 a a a g 0133
140	50 x 5	170 - 196	100 - 126	0,90	2,90	0,90	3,54	1	144 a a a g 0140
159	50 x 5	180 - 206	100 - 126	0,90	2,90	0,90	3,66	1	144 a a a g 0159
168	50 x 5	184 - 210	100 - 126	0,90	2,90	0,90	3,72	1	144 a a a g 0168
194	50 x 5	197 - 223	100 - 126	0,90	2,90	0,90	3,90	1	144 a a a g 0194
219	50 x 5	210 - 236	100 - 126	0,90	2,90	0,90	4,06	1	144 a a a g 0219

G galvanized
F hot-dip galvanized

Sliding support T 100/150, HV2 125-150, with 1 pipe clamp

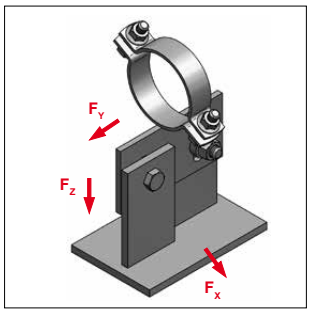

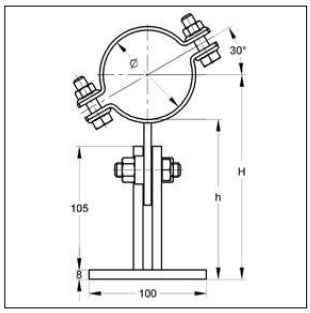

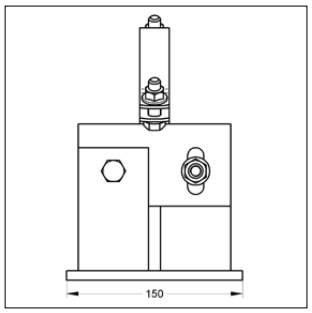

Please quote
G galvanized
F hot-dip galvanized
108 b b 0219

Sliding support T 100/150
HV2 125-150, with 1 pipe clamp

02

Specification:

Closure:	Hexagon nut / closure-screw
Model:	T-support
Support-width:	100
Support-length:	150
OD:	20 to 219 mm
Height, adjupc.able:	125 to 150 mm
Rec. tightening torque:	80 Nm
Delivery time:	on request

Technical data:

Material:	Steel
Material type:	S235JR
Surface:	galvanized
	hot-dip galvanized
Global safety coefficient:	1,54

* F_x = momentfree
Loads at temperature > 100 °C on request

Clamping range [mm]	Material Pipe clamp [mm]	Pipe axis H [mm]	Lower edge pipe h [mm]	max. load up to100°C* F_X [kN]	F_Z [kN]	F_Y [kN]	Weight (hot-dip galv.) [kg/Pc.]	Packing [Pc.]	Part-No.
20 - 23	25 x 3	134 - 160	123 - 149	0,80	1,00	0,80	2,44	1	144 b a a b 0023
25 - 29	25 x 3	137 - 163	123 - 149	0,80	1,00	0,80	2,45	1	144 b a a b 0029
30 - 35	25 x 3	140 - 166	123 - 149	0,80	1,00	0,80	2,46	1	144 b a a b 0035
36 - 40	25 x 3	143 - 169	123 - 149	0,80	1,00	0,80	2,48	1	144 b a a b 0040
41 - 46	25 x 3	146 - 172	123 - 149	0,80	1,00	0,80	2,49	1	144 b a a b 0046
48 - 55	25 x 3	150 - 176	123 - 149	0,80	1,00	0,80	2,50	1	144 b a a b 0055
57 - 61	25 x 3	153 - 179	123 - 149	0,80	1,00	0,80	2,52	1	144 b a a b 0061
63 - 67	25 x 3	156 - 182	123 - 149	0,80	1,00	0,80	2,53	1	144 b a a b 0067
70 - 76	25 x 3	161 - 187	123 - 149	0,80	1,00	0,80	2,54	1	144 b a a b 0076
84 - 90	30 x 3	168 - 194	123 - 149	0,70	2,50	0,70	2,67	1	144 b a a c 0090
96 - 102	30 x 3	174 - 200	123 - 149	0,70	2,50	0,70	2,70	1	144 b a a c 0102
108	50 x 5	179 - 205	125 - 151	0,90	2,90	0,90	3,35	1	144 b a a g 0108
114	50 x 5	182 - 208	125 - 151	0,90	2,90	0,90	3,39	1	144 b a a g 0114
133	50 x 5	192 - 218	125 - 151	0,90	2,90	0,90	3,52	1	144 b a a g 0133
140	50 x 5	195 - 221	125 - 151	0,90	2,90	0,90	3,56	1	144 b a a g 0140
159	50 x 5	205 - 231	125 - 151	0,90	2,90	0,90	3,69	1	144 b a a g 0159
168	50 x 5	209 - 235	125 - 151	0,90	2,90	0,90	3,75	1	144 b a a g 0168
194	50 x 5	222 - 248	125 - 151	0,90	2,90	0,90	3,92	1	144 b a a g 0194
219	50 x 5	235 - 261	125 - 151	0,90	2,90	0,90	4,09	1	144 b a a g 0219

G galvanized
F hot-dip galvanized

Sliding support T 100/150, HV1 100-125, with 1 pipe clamp, sound insulated

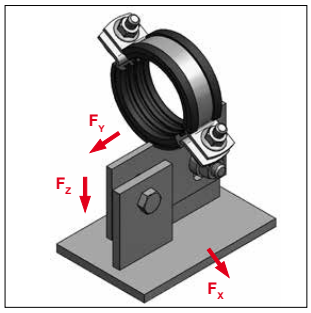

Sliding support T 100/150
HV1 100-125, with 1 pipe clamp
sound insulated

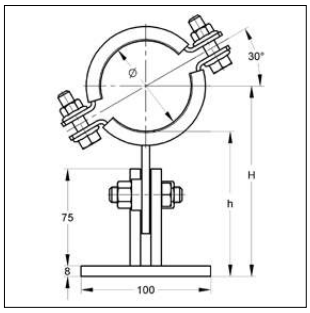

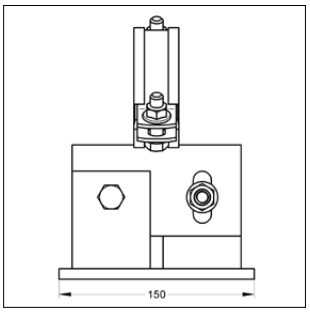

SCHALL-SCHUTZ DIN 4109

Baupc.offklasse ●B2● "Normal entflammbar" nach DIN 4102

Please quote
G galvanized
F hot-dip galvanized
108 b b 0219

Specification:

Closure:	Hexagon nut / closure-screw
Model:	T-support
Support-width:	100
Support-length:	150
OD:	20 to 219 mm
Sound insulation:	for DIN 4109
Height, adjupc.able:	100 to 125 mm
Rec. tightening torque:	80 Nm
Delivery time:	on request

Technical data:

Material:	Steel
Material type:	S235JR
Surface:	galvanized, hot-dip galvanized
Sound insulation lining:	Rubber TPE / (Ceramic tile on request)
Temperature resistance:	- 35 °C to + 100 °C
Insulation thickness:	6 mm
Global safety coefficient:	1,54

* F_x = momentfree
Loads at temperature > 100 °C on request

Clamping range [mm]	Material pipe clamp [mm]	Pipe axis H [mm]	Lower edge pipe h [mm]	max. load up to100°C* F_X [kN]	F_Z [kN]	F_Y [kN]	Weight (hot-dip galv.) [kg/Pc.]	Packing [Pc.]	Part-No.
20 - 25	25 x 3	112 - 138	99 - 125	0,80	0,80	0,80	2,44	1	144 a a b b 0025
26 - 30	25 x 3	114 - 140	99 - 125	0,80	0,80	0,80	2,46	1	144 a a b b 0030
31 - 36	25 x 3	117 - 143	99 - 125	0,80	0,80	0,80	2,47	1	144 a a b b 0036
38 - 45	25 x 3	122 - 148	99 - 125	0,80	0,80	0,80	2,49	1	144 a a b b 0045
47 - 51	25 x 3	125 - 151	99 - 125	0,80	0,80	0,80	2,51	1	144 a a b b 0051
53 - 57	25 x 3	128 - 154	99 - 125	0,80	0,80	0,80	2,53	1	144 a a b b 0057
58 - 64	25 x 3	131 - 157	99 - 125	0,80	0,80	0,80	2,54	1	144 a a b b 0064
65 - 70	30 x 3	134 - 160	99 - 125	0,70	2,40	0,70	2,66	1	144 a a b c 0070
72 - 78	30 x 3	138 - 164	99 - 125	0,70	2,40	0,70	2,68	1	144 a a b c 0078
84 - 90	30 x 3	144 - 170	99 - 125	0,70	2,40	0,70	2,72	1	144 a a b c 0090
94 - 100	30 x 3	149 - 175	99 - 125	0,70	2,40	0,70	2,75	1	144 a a b c 0100
102 - 106	30 x 3	152 - 178	99 - 125	0,70	2,40	0,70	2,78	1	144 a a b c 0106
108	50 x 5	155 - 181	101 - 127	0,90	2,90	0,90	3,52	1	144 a a b g 0108
114	50 x 5	158 - 184	101 - 127	0,90	2,90	0,90	3,56	1	144 a a b g 0114
133	50 x 5	168 - 194	101 - 127	0,90	2,90	0,90	3,71	1	144 a a b g 0133
140	50 x 5	171 - 197	101 - 127	0,90	2,90	0,90	3,77	1	144 a a b g 0140
159	50 x 5	181 - 207	101 - 127	0,90	2,90	0,90	3,91	1	144 a a b g 0159
168	50 x 5	185 - 211	101 - 127	0,90	2,90	0,90	3,98	1	144 a a b g 0168
194	50 x 5	198 - 224	101 - 127	0,90	2,90	0,90	4,18	1	144 a a b g 0194
219	50 x 5	211 - 237	101 - 127	0,90	2,90	0,90	4,38	1	144 a a b g 0219

G galvanized
F hot-dip galvanized

Sliding support T 100/150, HV2 125-150, with 1 pipe clamp, sound insulated

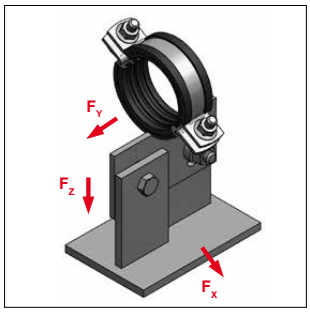

Sliding support T 100/150
HV2 125-150, with 1 pipe clamp
sound insulated

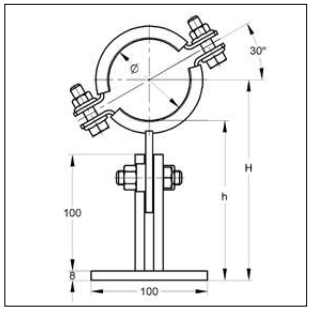

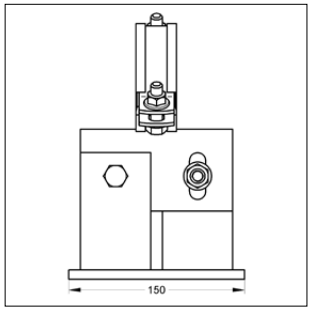

SCHALL-SCHUTZ DIN 4109

Baupc.offklasse B2 "Normal entflammbar" nach DIN 4102

Please quote
G galvanized
F hot-dip galvanized
108 b b b 0219

02

Specification:

Closure:	Hexagon nut / closure-screw
Model:	T-support
Support-width:	100
Support-length:	150
OD:	20 to 219 mm
Sound insulation:	for DIN 4109
Height, adjupc.able:	125 to 150 mm
Rec. tightening torque:	80 Nm
Delivery time:	on request

Technical data:

Material:	Steel
Material type:	S235JR
Surface:	galvanized hot-dip galvanized
Sound insulation lining:	Rubber TPE / (Ceramic tile on request)
Temperature resistance:	- 35 °C to + 100 °C
Insulation thickness:	6 mm
Global safety coefficient:	1,54

* F_x = momentfree
Loads at temperature > 100 °C on request

Clamping range [mm]	Material Pipe clamp [mm]	Pipe axis H [mm]	Lower edge Pipe h [mm]	max. load up to100°C* F_x [kN]	F_Z [kN]	F_Y [kN]	Weight (hot-dip galv.) [kg/Pc.]	Packing [Pc.]	Part-No.
20 - 25	25 x 3	137 - 163	124 - 150	0,80	0,80	0,80	2,60	1	144 b a b b 0025
26 - 30	25 x 3	139 - 165	124 - 150	0,80	0,80	0,80	2,61	1	144 b a b b 0030
31 - 36	25 x 3	142 - 168	124 - 150	0,80	0,80	0,80	2,62	1	144 b a b b 0036
38 - 45	25 x 3	147 - 173	124 - 150	0,80	0,80	0,80	2,64	1	144 b a b b 0045
47 - 51	25 x 3	150 - 176	124 - 150	0,80	0,80	0,80	2,66	1	144 b a b b 0051
53 - 57	25 x 3	153 - 179	124 - 150	0,80	0,80	0,80	2,68	1	144 b a b b 0057
58 - 64	25 x 3	156 - 182	124 - 150	0,80	0,80	0,80	2,69	1	144 b a b b 0064
65 - 70	30 x 3	159 - 185	124 - 150	0,70	2,40	0,70	2,81	1	144 b a b c 0070
72 - 78	30 x 3	163 - 189	124 - 150	0,70	2,40	0,70	2,84	1	144 b a b c 0078
84 - 90	30 x 3	169 - 195	124 - 150	0,70	2,40	0,70	2,87	1	144 b a b c 0090
94 - 100	30 x 3	174 - 200	124 - 150	0,70	2,40	0,70	2,91	1	144 b a b c 0100
102 - 106	30 x 3	177 - 203	124 - 150	0,70	2,40	0,70	2,93	1	144 b a b c 0106
108	50 x 5	180 - 206	126 - 150	0,90	2,90	0,90	3,67	1	144 b a b g 0108
114	50 x 5	183 - 209	126 - 150	0,90	2,90	0,90	3,72	1	144 b a b g 0114
133	50 x 5	193 - 219	126 - 150	0,90	2,90	0,90	3,87	1	144 b a b g 0133
140	50 x 5	196 - 222	126 - 150	0,90	2,90	0,90	3,92	1	144 b a b g 0140
159	50 x 5	206 - 232	126 - 150	0,90	2,90	0,90	4,07	1	144 b a b g 0159
168	50 x 5	210 - 236	126 - 150	0,90	2,90	0,90	4,14	1	144 b a b g 0168
194	50 x 5	223 - 249	126 - 150	0,90	2,90	0,90	4,34	1	144 b a b g 0194
219	50 x 5	236 - 262	126 - 150	0,90	2,90	0,90	4,53	1	144 b a b g 0219

G galvanized
F hot-dip galvanized

Sliding support T 100/200, HV1 100-125 with 2 pipe clamps

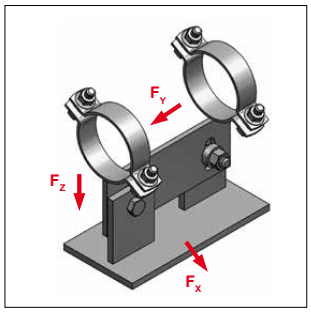

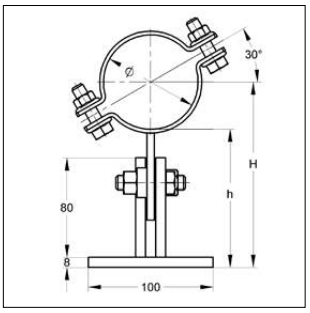

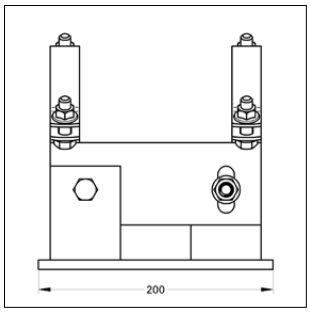

Please quote
G galvanized
F hot-dip galvanized
108 b □ b 0219

Sliding support T 100/200,
HV1 100-125, with 2 pipe clamps

Specification:

Closure:	Hexagon nut / closure-screw
Model:	T-support
Support-width:	100
Support-length:	200
OD:	20 to 219 mm
Height, adjupc.able:	100 to 125 mm
Rec. tightening torque:	80 Nm
Delivery time:	on request

Technical data:

Material:	Steel
Material type:	S235JR
Surface:	galvanized
	hot-dip galvanized
Global safety coefficient:	1,54

* F_x = momentfree
Loads at temperature > 100 °C on request

Clamping range [mm]	Material Pipe clamp [mm]	Pipe axis H [mm]	Lower edge Pipe h [mm]	max. load up to100°C* F_X [kN]	F_Z [kN]	F_Y [kN]	Weight (hot-dip galv.) [kg/Pc.]	Packing [Pc.]	Part-No.
20 - 23	25 x 3	109 - 135	98 - 124	1,60	2,00	1,60	3,13	1	144 a b a b 0023
25 - 29	25 x 3	112 - 138	98 - 124	1,60	2,00	1,60	3,15	1	144 a b a b 0029
30 - 35	25 x 3	115 - 141	98 - 124	1,60	2,00	1,60	3,17	1	144 a b a b 0035
36 - 40	25 x 3	118 - 144	98 - 124	1,60	2,00	1,60	3,19	1	144 a b a b 0040
41 - 46	25 x 3	121 - 147	98 - 124	1,60	2,00	1,60	3,21	1	144 a b a b 0046
48 - 55	25 x 3	125 - 151	98 - 124	1,60	2,00	1,60	3,24	1	144 a b a b 0055
57 - 61	25 x 3	128 - 154	98 - 124	1,60	2,00	1,60	3,27	1	144 a b a b 0061
63 - 67	25 x 3	131 - 157	98 - 124	1,50	5,00	1,50	3,30	1	144 a b a b 0067
70 - 76	25 x 3	136 - 162	98 - 124	1,50	5,00	1,50	3,32	1	144 a b a b 0076
84 - 90	30 x 3	143 - 169	98 - 124	1,50	5,00	1,50	3,58	1	144 a b a c 0090
96 - 102	30 x 3	149 - 175	98 - 124	1,50	5,00	1,50	3,64	1	144 a b a c 0102
108	50 x 5	154 - 180	100 - 126	1,70	5,80	1,70	4,94	1	144 a b a g 0108
114	50 x 5	157 - 183	100 - 126	1,70	5,80	1,70	5,02	1	144 a b a g 0114
133	50 x 5	167 - 193	100 - 126	1,70	5,80	1,70	5,27	1	144 a b a g 0133
140	50 x 5	170 - 196	100 - 126	1,70	5,80	1,70	5,37	1	144 a b a g 0140
159	50 x 5	180 - 206	100 - 126	1,70	5,80	1,70	5,62	1	144 a b a g 0159
168	50 x 5	184 - 210	100 - 126	1,70	5,80	1,70	5,74	1	144 a b a g 0168
194	50 x 5	197 - 223	100 - 126	1,70	5,80	1,70	6,08	1	144 a b a g 0194
219	50 x 5	210 - 236	100 - 126	1,70	5,80	1,70	6,41	1	144 a b a g 0219

G galvanized
F hot-dip galvanized

Sliding support T 100/200, HV2 125-150 with 2 pipe clamps

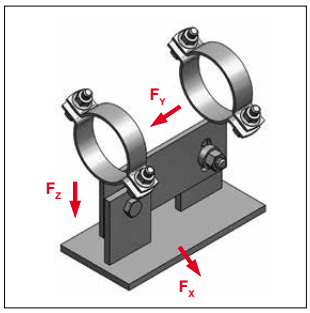

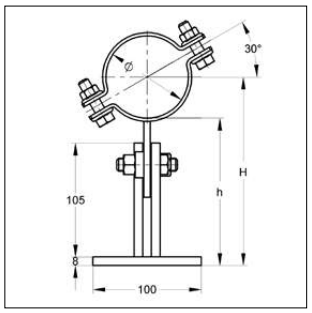

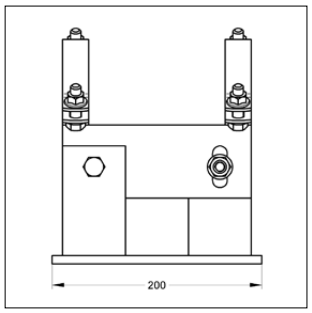

Please quote
G galvanized
F hot-dip galvanized
108 b b 0219

Sliding support T 100/200
HV2 125-150, with 2 pipe clamps

Specification:

Closure:	Hexagon nut / closure-screw
Model:	T-support
Support-width:	100
Support-length:	200
OD:	20 to 219 mm
Height, adjupc.able:	125 to 150 mm
Rec. tightening torque:	80 Nm
Delivery time:	on request

Technical data:

Material:	Steel
Material type:	S235JR
Surface:	galvanized
	hot-dip galvanized
Global safety coefficient:	1,54

* F_x = momentfree.
Loads at temperature > 100 °C on request

Clamping range [mm]	Material Pipe clamp [mm]	Pipe axis H [mm]	Lower edge Pipe h [mm]	max. load up to100°C* F_X [kN]	F_Z [kN]	F_Y [kN]	Weight (hot-dip galv.) [kg/Pc.]	Packing [Pc.]	Part-No.
20 - 23	25 x 3	134 - 160	123 - 149	1,60	2,00	1,60	3,30	1	144 b b a b 0023
25 - 29	25 x 3	137 - 163	123 - 149	1,60	2,00	1,60	3,32	1	144 b b a b 0029
30 - 35	25 x 3	140 - 166	123 - 149	1,60	2,00	1,60	3,34	1	144 b b a b 0035
36 - 40	25 x 3	143 - 169	123 - 149	1,60	2,00	1,60	3,36	1	144 b b a b 0040
41 - 46	25 x 3	146 - 172	123 - 149	1,60	2,00	1,60	3,38	1	144 b b a b 0046
48 - 55	25 x 3	150 - 176	123 - 149	1,60	2,00	1,60	3,41	1	144 b b a b 0055
57 - 61	25 x 3	153 - 179	123 - 149	1,60	2,00	1,60	3,44	1	144 b b a b 0061
63 - 67	25 x 3	156 - 182	123 - 149	1,60	2,00	1,60	3,47	1	144 b b a b 0067
70 - 76	25 x 3	161 - 187	123 - 149	1,60	2,00	1,60	3,50	1	144 b b a b 0076
84 - 90	30 x 3	168 - 194	123 - 149	1,50	5,00	1,50	3,75	1	144 b b a c 0090
96 - 102	30 x 3	174 - 200	123 - 149	1,50	5,00	1,50	3,81	1	144 b b a c 0102
108	50 x 5	179 - 205	125 - 151	1,70	5,80	1,70	5,11	1	144 b b a g 0108
114	50 x 5	182 - 208	125 - 151	1,70	5,80	1,70	5,19	1	144 b b a g 0114
133	50 x 5	192 - 218	125 - 151	1,70	5,80	1,70	5,45	1	144 b b a g 0133
140	50 x 5	195 - 221	125 - 151	1,70	5,80	1,70	5,54	1	144 b b a g 0140
159	50 x 5	205 - 231	125 - 151	1,70	5,80	1,70	5,79	1	144 b b a g 0159
168	50 x 5	209 - 235	125 - 151	1,70	5,80	1,70	5,91	1	144 b b a g 0168
194	50 x 5	222 - 248	125 - 151	1,70	5,80	1,70	6,25	1	144 b b a g 0194
219	50 x 5	235 - 261	125 - 151	1,70	5,80	1,70	6,58	1	144 b b a g 0219

G galvanized
F hot-dip galvanized

Sliding support T 100/200, HV3 150-175 with 2 pipe clamps

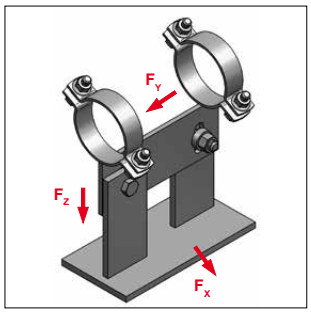

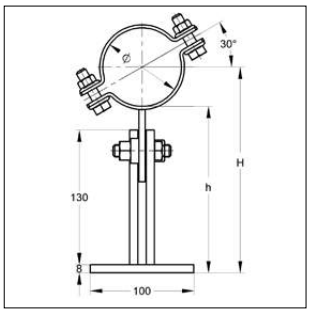

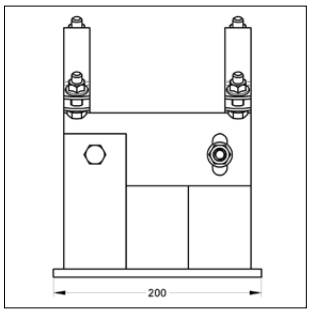

Please quote
G galvanized
F hot-dip galvanized
108 b b 0219

Sliding support T 100/200
HV3 150-175, with 2 pipe clamps

Specification:

Closure:	Hexagon nut / closure-screw
Model:	T-support
Support-width:	100
Support-length:	200
OD:	20 to 219 mm
Height, adjupc.able:	150 to 175 mm
Rec. tightening torque:	80 Nm
Delivery time:	on request

Technical data:

Material:	Steel
Material type:	S235JR
Surface:	galvanized
	hot-dip galvanized
Global safety coefficient:	1,54

* F_x = momentfree
Loads at temperature > 100 °C on request

Clamping range [mm]	Material Pipe clamp [mm]	Pipe axis H [mm]	Lower edge Pipe h [mm]	max. load up to100°C* F_X [kN]	F_Z [kN]	F_Y [kN]	Weight (hot-dip galv.) [kg/Pc.]	Packing [Pc.]	Part-No.
20 - 23	25 x 3	159 - 185	148 - 174	1,60	2,00	1,60	3,51	1	144 c b a b 0023
25 - 29	25 x 3	162 - 188	148 - 174	1,60	2,00	1,60	3,53	1	144 c b a b 0029
30 - 35	25 x 3	165 - 191	148 - 174	1,60	2,00	1,60	3,55	1	144 c b a b 0035
36 - 40	25 x 3	168 - 194	148 - 174	1,60	2,00	1,60	3,57	1	144 c b a b 0040
41 - 46	25 x 3	171 - 197	148 - 174	1,60	2,00	1,60	3,59	1	144 c b a b 0046
48 - 55	25 x 3	175 - 201	148 - 174	1,60	2,00	1,60	3,62	1	144 c b a b 0055
57 - 61	25 x 3	178 - 204	148 - 174	1,60	2,00	1,60	3,65	1	144 c b a b 0061
63 - 67	25 x 3	181 - 207	148 - 174	1,60	2,00	1,60	3,68	1	144 c b a b 0067
70 - 76	25 x 3	186 - 212	148 - 174	1,60	2,00	1,60	3,71	1	144 c b a b 0076
84 - 90	30 x 3	193 - 219	148 - 174	1,50	5,00	1,50	3,96	1	144 c b a c 0090
96 - 102	30 x 3	199 - 225	148 - 174	1,50	5,00	1,50	4,02	1	144 c b a c 0102
108	50 x 5	204 - 230	150 - 176	1,70	5,80	1,70	5,32	1	144 c b a g 0108
114	50 x 5	207 - 233	150 - 176	1,70	5,80	1,70	5,40	1	144 c b a g 0114
133	50 x 5	217 - 143	150 - 176	1,70	5,80	1,70	5,66	1	144 c b a g 0133
140	50 x 5	220 - 246	150 - 176	1,70	5,80	1,70	5,75	1	144 c b a g 0140
159	50 x 5	230 - 256	150 - 176	1,70	5,80	1,70	5,99	1	144 c b a g 0159
168	50 x 5	234 - 260	150 - 176	1,70	5,80	1,70	6,12	1	144 c b a g 0168
194	50 x 5	247 - 273	150 - 176	1,70	5,80	1,70	6,46	1	144 c b a g 0194
219	50 x 5	260 - 286	150 - 176	1,70	5,80	1,70	6,79	1	144 c b a g 0219

G galvanized
F hot-dip galvanized

Sliding support T 100/200, HV1 100-125 with 2 pipe clamps, sound insulated

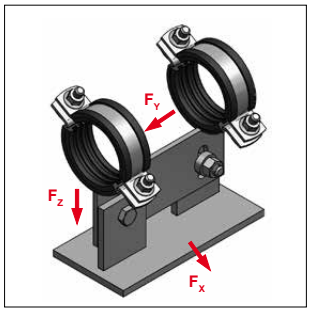

Sliding support T 100/200, HV1 100-125 with 2 pipe clamps, sound insulated

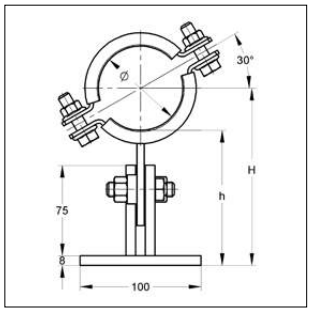

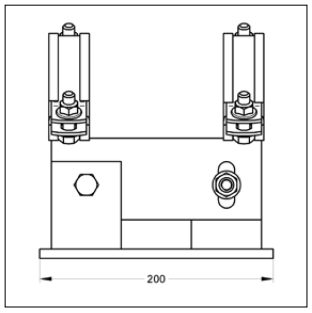

SCHALL-SCHUTZ DIN 4109

Baupc.offklasse B2 "Normal entflammbar" nach DIN 4102

Please quote
G galvanized
F hot-dip galvanized
108 b b b 0219

Specification:

Closure:	Hexagon nut / closure-screw
Model:	T-support
Support-width:	100
Support-length:	200
OD:	20 to 219 mm
Sound insulation:	for DIN 4109
Height, adjupc.able:	100 to 125 mm
Rec. tightening torque:	80 Nm
Delivery time:	on request

Technical data:

Material:	Steel
Material type:	S235JR
Surface:	galvanized hot-dip galvanized
Sound insulation lining:	Rubber TPE / (ceramic tile on request)
Temperature resistance:	- 35 °C to + 100 °C
Global safety coefficient:	1,54

* F_x = momentfree
Loads at temperature > 100 °C on request

Clamping range [mm]	Material Pipe clamp [mm]	Pipe axis H [mm]	Lower edge Pipe h [mm]	max. load up to100°C* F_x [kN]	F_Z [kN]	F_Y [kN]	Weight (hot-dip galv.) [kg/Pc.]	Packing [Pc.]	Part-No.
20 - 25	25 x 3	112 - 138	99 - 125	1,60	1,60	1,60	3,15	1	144 a b b b 0025
26 - 30	25 x 3	114 - 140	99 - 125	1,60	1,60	1,60	3,18	1	144 a b b b 0030
31 - 36	25 x 3	117 - 143	99 - 125	1,60	1,60	1,60	3,20	1	144 a b b b 0036
38 - 45	25 x 3	122 - 148	99 - 125	1,60	1,60	1,60	3,24	1	144 a b b b 0045
47 - 51	25 x 3	125 - 151	99 - 125	1,60	1,60	1,60	3,29	1	144 a b b b 0051
53 - 57	25 x 3	128 - 154	99 - 125	1,60	1,60	1,60	3,32	1	144 a b b b 0057
58 - 64	25 x 3	131 - 157	99 - 125	1,60	1,60	1,60	3,34	1	144 a b b b 0064
65 - 70	30 x 3	134 - 160	99 - 125	1,40	4,80	1,40	3,59	1	144 a b b c 0070
72 - 78	30 x 3	138 - 164	99 - 125	1,40	4,80	1,40	3,63	1	144 a b b c 0078
84 - 90	30 x 3	144 - 170	99 - 125	1,40	4,80	1,40	3,71	1	144 a b b c 0090
94 - 100	30 x 3	149 - 175	99 - 125	1,40	4,80	1,40	3,77	1	144 a b b c 0100
102 - 106	30 x 3	152 - 178	99 - 125	1,40	4,80	1,40	3,82	1	144 a b b c 0106
108	50 x 5	155 - 181	101 - 127	1,70	5,80	1,70	5,30	1	144 a b b g 0108
114	50 x 5	158 - 184	101 - 127	1,70	5,80	1,70	5,40	1	144 a b b g 0114
133	50 x 5	168 - 194	101 - 127	1,70	5,80	1,70	5,69	1	144 a b b g 0133
139	50 x 5	171 - 197	101 - 127	1,70	5,80	1,70	5,80	1	144 a b b g 0140
159	50 x 5	181 - 207	101 - 127	1,70	5,80	1,70	6,09	1	144 a b b g 0159
168	50 x 5	185 - 211	101 - 127	1,70	5,80	1,70	6,23	1	144 a b b g 0168
194	50 x 5	198 - 224	101 - 127	1,70	5,80	1,70	6,64	1	144 a b b g 0194
219	50 x 5	211 - 237	101 - 127	1,70	5,80	1,70	7,02	1	144 a b b g 0219

G galvanized
F hot-dip galvanized

Sliding support 100/200, HV2 125-150 with 2 pipe clamps, sound insulated

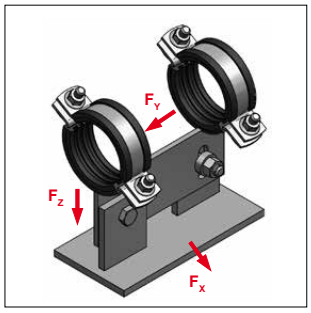

Sliding support 100/200, HV2 100-125 with 2 pipe clamps, sound insulated

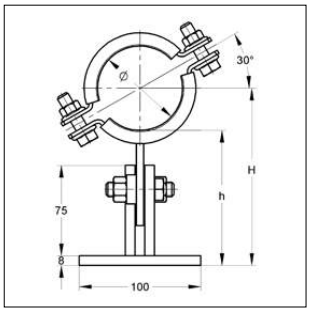

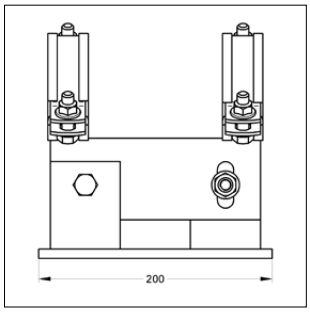

SCHALL-SCHUTZ DIN 4109

Baupc.offklasse ●B2● "Normal entflammbar" nach DIN 4102

Please quote
G galvanized
F hot-dip galvanized
108 b ☐ b 0219

Specification:

Closure:	Hexagon nut / closure-screw
Model:	T-support
Support-width:	100
Support-length:	200
OD:	20 to 219 mm
Sound insulation:	for DIN 4109
Height, adjupc.able:	125 to 150 mm
Rec. tightening torque:	80 Nm
Delivery time:	on request

Technical data:

Material:	Steel
Material type:	S235JR
Surface:	galvanized hot-dip galvanized
Sound insulation lining:	Rubber TPE / (Ceramic tile on request)
Temperature resistance:	- 35 °C to + 100 °C
Global safety coefficient:	1,54

* F_x = momentfree
Loads at temperature > 100 °C on request

Clamping range [mm]	Material Pipe clamp [mm]	Pipe axis H [mm]	Lower edge Pipe h [mm]	max. load up to100°C* F_X [kN]	F_Z [kN]	F_Y [kN]	Weight (hot-dip galv.) [kg/Pc.]	Packing [Pc.]	Part-No.
20 - 25	25 x 3	137 - 163	124 - 150	1,60	1,60	1,60	3,33	1	144 b ☐ b b b 0025
26 - 30	25 x 3	139 - 165	124 - 150	1,60	1,60	1,60	3,36	1	144 b ☐ b b b 0030
31 - 36	25 x 3	142 - 168	124 - 150	1,60	1,60	1,60	3,39	1	144 b ☐ b b b 0036
38 - 45	25 x 3	147 - 173	124 - 150	1,60	1,60	1,60	3,42	1	144 b ☐ b b b 0045
47 - 51	25 x 3	150 - 176	124 - 150	1,60	1,60	1,60	3,47	1	144 b ☐ b b b 0051
53 - 57	25 x 3	153 - 179	124 - 150	1,60	1,60	1,60	3,50	1	144 b ☐ b b b 0057
58 - 64	25 x 3	156 - 182	124 - 150	1,60	1,60	1,60	3,53	1	144 b ☐ b b b 0064
65 - 70	30 x 3	159 - 185	124 - 150	1,40	4,80	1,40	3,77	1	144 b ☐ b b c 0070
72 - 78	30 x 3	163 - 189	124 - 150	1,40	4,80	1,40	3,81	1	144 b ☐ b b c 0078
84 - 90	30 x 3	169 - 195	124 - 150	1,40	4,80	1,40	3,89	1	144 b ☐ b b c 0090
94 - 100	30 x 3	174 - 200	124 - 150	1,40	4,80	1,40	3,95	1	144 b ☐ b b c 0100
102 - 106	30 x 3	177 - 203	124 - 150	1,40	4,80	1,40	4,00	1	144 b ☐ b b c 0106
108	50 x 5	180 - 206	126 - 152	1,70	5,80	1,70	5,49	1	144 b ☐ b b g 0108
114	50 x 5	183 - 209	126 - 152	1,70	5,80	1,70	5,58	1	144 b ☐ b b g 0114
133	50 x 5	193 - 219	126 - 152	1,70	5,80	1,70	5,87	1	144 b ☐ b b g 0133
139	50 x 5	196 - 222	126 - 152	1,70	5,80	1,70	5,99	1	144 b ☐ b b g 0140
159	50 x 5	206 - 232	126 - 152	1,70	5,80	1,70	6,28	1	144 b ☐ b b g 0159
168	50 x 5	210 - 236	126 - 152	1,70	5,80	1,70	6,41	1	144 b ☐ b b g 0168
194	50 x 5	223 - 249	126 - 152	1,70	5,80	1,70	6,82	1	144 b ☐ b b g 0194
219	50 x 5	236 - 262	126 - 152	1,70	5,80	1,70	7,20	1	144 b ☐ b b g 0219

G galvanized
F hot-dip galvanized

Sliding support 100/200, HV3 150-175 with 2 pipe clamps, sound insulated

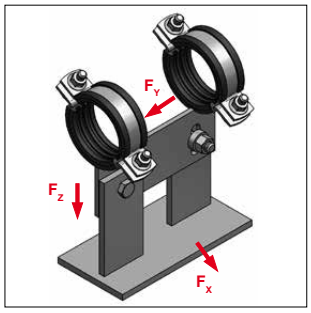

Sliding support T 100/200, HV3 150-175 with 2 pipe clamps, sound insulated

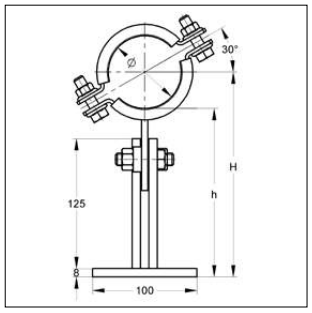

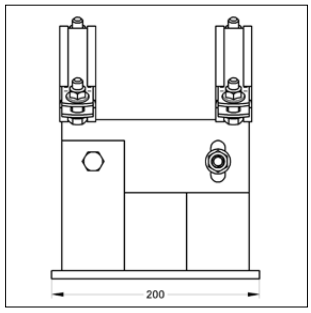

SCHALL-SCHUTZ DIN 4109

Baupc.offklasse B2 "Normal entflammbar" nach DIN 4102

Please quote
G galvanized
F hot-dip galvanized
108 b b b 0219

Specification:

Closure:	Hexagon nut / closure-screw
Model:	T-support
Support-width:	100
Support-length:	200
OD:	20 to 219 mm
Sound insulation:	for DIN 4109
Height, adjupc.able:	150 to 175 mm
Rec. tightening torque:	80 Nm
Delivery time:	on request

Technical data:

Material:	Steel
Material type:	S235JR
Surface:	galvanized hot-dip galvanized
Sound insulation lining:	Rubber TPE / (Ceramic tile on request)
Temperature resistance:	- 35 °C to + 100 °C
Global safety coefficient:	1,54

* F_x = momentfree
Loads at temperature > 100 °C on request

Clamping range [mm]	Material Pipe clamp [mm]	Pipe axis H [mm]	Lower edge Pipe h [mm]	max. load up to100°C* F_X [kN]	F_Z [kN]	F_Y [kN]	Weight (hot-dip galv.) [kg/Pc.]	Packing [Pc.]	Part-No.
20 - 25	25 x 3	162 - 188	149 - 175	1,60	1,60	1,60	3,54	1	144 c b b b 0025
26 - 30	25 x 3	164 - 190	149 - 175	1,60	1,60	1,60	3,57	1	144 c b b b 0030
31 - 36	25 x 3	167 - 193	149 - 175	1,60	1,60	1,60	3,60	1	144 c b b b 0036
38 - 45	25 x 3	172 - 198	149 - 175	1,60	1,60	1,60	3,63	1	144 c b b b 0045
47 - 51	25 x 3	175 - 201	149 - 175	1,60	1,60	1,60	3,68	1	144 c b b b 0051
53 - 57	25 x 3	178 - 204	149 - 175	1,60	1,60	1,60	3,71	1	144 c b b b 0057
58 - 64	25 x 3	181 - 207	149 - 175	1,60	1,60	1,60	3,74	1	144 c b b b 0064
65 - 70	30 x 3	184 - 210	149 - 175	1,40	4,80	1,40	3,98	1	144 c b b c 0070
72 - 78	30 x 3	188 - 214	149 - 175	1,40	4,80	1,40	4,02	1	144 c b b c 0078
84 - 90	30 x 3	194 - 220	149 - 175	1,40	4,80	1,40	4,10	1	144 c b b c 0090
94 - 100	30 x 3	199 - 225	149 - 175	1,40	4,80	1,40	4,16	1	144 c b b c 0100
102 - 106	30 x 3	202 - 228	149 - 175	1,40	4,80	1,40	4,21	1	144 c b b c 0106
108	50 x 5	205 - 231	151 - 177	1,70	5,80	1,70	5,70	1	144 c b b g 0108
114	50 x 5	208 - 234	151 - 177	1,70	5,80	1,70	5,79	1	144 c b b g 0114
133	50 x 5	218 - 244	151 - 177	1,70	5,80	1,70	6,08	1	144 c b b g 0133
140	50 x 5	221 - 247	151 - 177	1,70	5,80	1,70	6,20	1	144 c b b g 0140
159	50 x 5	231 - 257	151 - 177	1,70	5,80	1,70	6,49	1	144 c b b g 0159
168	50 x 5	235 - 261	151 - 177	1,70	5,80	1,70	6,62	1	144 c b b g 0168
194	50 x 5	246 - 274	151 - 177	1,70	5,80	1,70	7,03	1	144 c b b g 0194
219	50 x 5	261 - 287	151 - 177	1,70	5,80	1,70	7,41	1	144 c b b g 0219

G galvanized
F hot-dip galvanized

Sliding support 100/300, HV1 100-125 with 2 pipe clamps

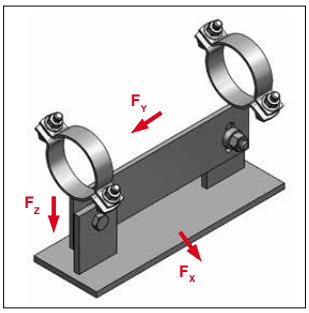

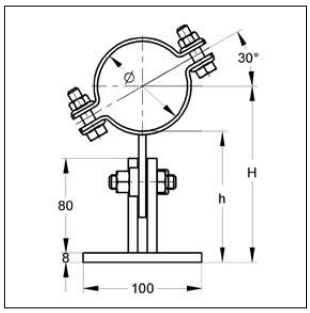

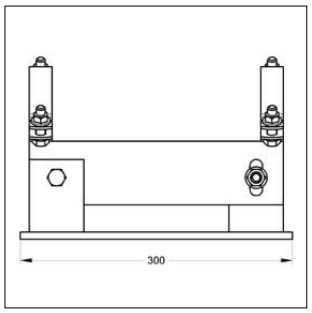

Please quote
G galvanized
F hot-dip galvanized
108 b b 0219

Sliding support T 100/300
HV1 100-125, with 2 pipe clamps

Specification:

Closure:	Hexagon nut / closure-screw
Model:	T-support
Support-width:	100
Support-length:	300
OD:	20 to 219 mm
Height, adjupc.able:	100 to 125 mm
Rec. tightening torque:	80 Nm
Delivery time:	on request

Technical data:

Material:	Steel
Material type:	S235JR
Surface:	galvanized
	hot-dip galvanized
Global safety coefficient:	1,54

* F_x = momentfree
Loads at temperature > 100 °C on request

Clamping range [mm]	Material Pipe clamp [mm]	Pipe axis H [mm]	Lower edge Pipe h [mm]	max. load up to100°C* F_X [kN]	F_Z [kN]	F_Y [kN]	Weight (hot-dip galv.) [kg/Pc.]	Packing [Pc.]	Part-No.
20 - 23	25 x 3	111 - 135	98 - 124	1,60	2,00	1,60	4,18	1	144 a c a b 0023
25 - 29	25 x 3	112 - 138	98 - 124	1,60	2,00	1,60	4,20	1	144 a c a b 0029
30 - 35	25 x 3	115 - 141	98 - 124	1,60	2,00	1,60	4,22	1	144 a c a b 0035
36 - 40	25 x 3	118 - 144	98 - 124	1,60	2,00	1,60	4,25	1	144 a c a b 0040
41 - 46	25 x 3	121 - 147	98 - 124	1,60	2,00	1,60	4,27	1	144 a c a b 0046
48 - 55	25 x 3	125 - 151	98 - 124	1,60	2,00	1,60	4,30	1	144 a c a b 0055
57 - 61	25 x 3	128 - 154	98 - 124	1,60	2,00	1,60	4,33	1	144 a c a b 0061
63 - 67	25 x 3	131 - 157	98 - 124	1,60	2,00	1,60	4,35	1	144 a c a b 0067
70 - 76	25 x 3	136 - 162	98 - 124	1,60	2,00	1,60	4,38	1	144 a c a b 0076
84 - 90	30 x 3	143 - 169	98 - 124	1,50	5,00	1,50	4,64	1	144 a c a c 0090
96 - 102	30 x 3	149 - 175	98 - 124	1,50	5,00	1,50	4,69	1	144 a c a c 0102
108	50 x 5	154 - 180	100 - 126	1,70	5,80	1,70	6,00	1	144 a c a g 0108
114	50 x 5	157 - 183	100 - 126	1,70	5,80	1,70	6,08	1	144 a c a g 0114
133	50 x 5	167 - 193	100 - 126	1,70	5,80	1,70	6,33	1	144 a c a g 0133
140	50 x 5	170 - 196	100 - 126	1,70	5,80	1,70	6,42	1	144 a c a g 0140
159	50 x 5	180 - 206	100 - 126	1,70	5,80	1,70	6,67	1	144 a c a g 0159
168	50 x 5	184 - 210	100 - 126	1,70	5,80	1,70	6,79	1	144 a c a g 0168
194	50 x 5	197 - 223	100 - 126	1,70	5,80	1,70	7,14	1	144 a c a g 0194
219	50 x 5	210 - 236	100 - 126	1,70	5,80	1,70	7,47	1	144 a c a g 0219

G galvanized
F hot-dip galvanized

Sliding support 100/300, HV2 125-150 with 2 pipe clamps

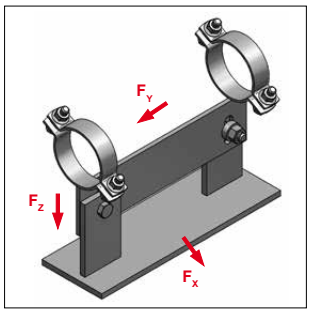

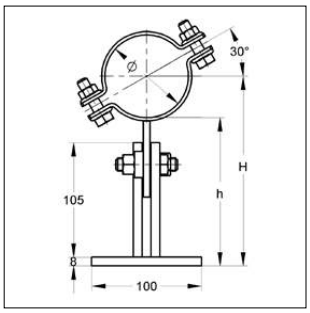

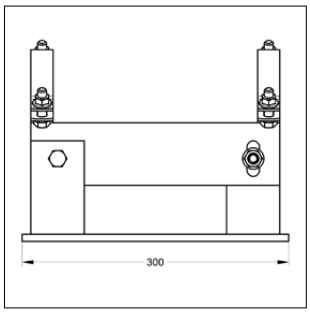

Please quote
G galvanized
F hot-dip galvanized
108 b b 0219

Sliding support T 100/300
HV2 125-150, with 2 pipe clamps

Specification:

Closure:	Hexagon nut / closure-screw
Model:	T-support
Support-width:	100
Support-length:	300
OD:	20 to 219 mm
Height, adjupc.able:	125 to 150 mm
Rec. tightening torque:	80 Nm
Delivery time:	on request

Technical data:

Material:	Steel
Material type:	S235JR
Surface:	galvanized
	hot-dip galvanized
Global safety coefficient:	1,54

* F_x = momentfree
Loads at temperature > 100 °C on request

Clamping range [mm]	Material Pipe clamp [mm]	Pipe axis H [mm]	Lower edge Pipe h [mm]	max. load up to100°C* F_X [kN]	F_Z [kN]	F_Y [kN]	Weight (hot-dip galv.) [kg/Pc.]	Packing [Pc.]	Part-No.
20 - 23	25 x 3	134 - 160	123 - 149	1,60	2,00	1,60	4,36	1	144 b c a b 0023
25 - 29	25 x 3	137 - 163	123 - 149	1,60	2,00	1,60	4,38	1	144 b c a b 0029
30 - 35	25 x 3	140 - 166	123 - 149	1,60	2,00	1,60	4,40	1	144 b c a b 0035
36 - 40	25 x 3	143 - 169	123 - 149	1,60	2,00	1,60	4,42	1	144 b c a b 0040
41 - 46	25 x 3	146 - 172	123 - 149	1,60	2,00	1,60	4,44	1	144 b c a b 0046
48 - 55	25 x 3	150 - 176	123 - 149	1,60	2,00	1,60	4,47	1	144 b c a b 0055
57 - 61	25 x 3	153 - 179	123 - 149	1,60	2,00	1,60	4,50	1	144 b c a b 0061
63 - 67	25 x 3	156 - 182	123 - 149	1,60	2,00	1,60	4,53	1	144 b c a b 0067
70 - 76	25 x 3	161 - 187	123 - 149	1,60	2,00	1,60	4,56	1	144 b c a b 0076
84 - 90	30 x 3	168 - 194	123 - 149	1,50	5,00	1,50	4,81	1	144 b c a c 0090
96 - 102	30 x 3	174 - 200	123 - 149	1,50	5,00	1,50	4,87	1	144 b c a c 0102
108	50 x 5	179 - 205	125 - 151	1,70	5,80	1,70	6,17	1	144 b c a g 0108
114	50 x 5	182 - 208	125 - 151	1,70	5,80	1,70	6,25	1	144 b c a g 0114
133	50 x 5	192 - 218	125 - 151	1,70	5,80	1,70	6,51	1	144 b c a g 0133
140	50 x 5	195 - 221	125 - 151	1,70	5,80	1,70	6,60	1	144 b c a g 0140
159	50 x 5	205 - 231	125 - 151	1,70	5,80	1,70	6,85	1	144 b c a g 0159
168	50 x 5	209 - 235	125 - 151	1,70	5,80	1,70	6,97	1	144 b c a g 0168
194	50 x 5	222 - 248	125 - 151	1,70	5,80	1,70	7,31	1	144 b c a g 0194
219	50 x 5	235 - 261	125 - 151	1,70	5,80	1,70	7,64	1	144 b c a g 0219

G galvanized
F hot-dip galvanized

Sliding support 100/300, HV3 150-175 with 2 pipe clamps

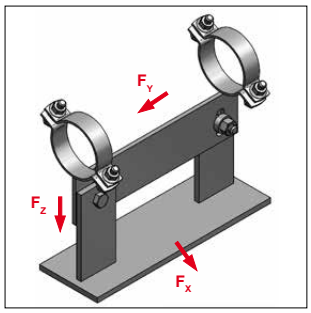

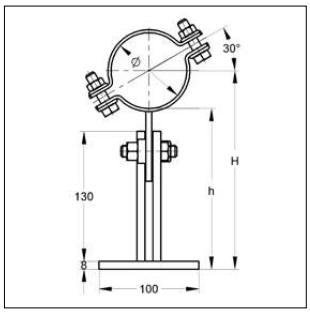

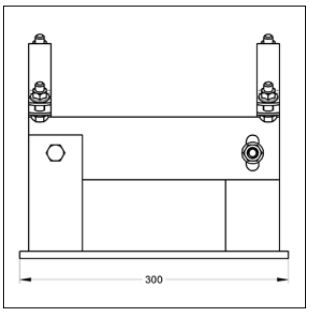

Please quote
G galvanized
F hot-dip galvanized
108 b b 0219

Sliding support T 100/300
HV3 150-175, with 2 pipe clamps

Specification:

Closure:	Hexagon nut / closure-screw
Model:	T-support
Support-width:	100
Support-length:	300
OD:	20 to 219 mm
Height, adjupc.able:	150 to 175 mm
Rec. tightening torque:	80 Nm
Delivery time:	on request

Technical data:

Material:	Steel
Material type:	S235JR
Surface:	galvanized
	hot-dip galvanized
Global safety coefficient:	1,54

* F_x = momentfree
Loads at temperature > 100 °C on request

Clamping range [mm]	Material Pipe clamp [mm]	Pipe axis H [mm]	Lower edge Pipe h [mm]	max. load up to100°C* F_X [kN]	F_Z [kN]	F_Y [kN]	Weight (hot-dip galv.) [kg/Pc.]	Packing [Pc.]	Part-No.
20 - 23	25 x 3	159 - 185	148 - 174	1,60	2,00	1,60	4,57	1	144 c c a b 0023
25 - 29	25 x 3	162 - 188	148 - 174	1,60	2,00	1,60	4,59	1	144 c c a b 0029
30 - 35	25 x 3	165 - 191	148 - 174	1,60	2,00	1,60	4,61	1	144 c c a b 0035
36 - 40	25 x 3	168 - 194	148 - 174	1,60	2,00	1,60	4,63	1	144 c c a b 0040
41 - 46	25 x 3	171 - 197	148 - 174	1,60	2,00	1,60	4,65	1	144 c c a b 0046
48 - 55	25 x 3	175 - 201	148 - 174	1,60	2,00	1,60	4,68	1	144 c c a b 0055
57 - 61	25 x 3	178 - 204	148 - 174	1,60	2,00	1,60	4,71	1	144 c c a b 0061
63 - 67	25 x 3	181 - 207	148 - 174	1,60	2,00	1,60	4,74	1	144 c c a b 0067
70 - 76	25 x 3	186 - 212	148 - 174	1,60	2,00	1,60	4,77	1	144 c c a b 0076
84 - 90	30 x 3	193 - 219	148 - 174	1,50	5,00	1,50	5,02	1	144 c c a c 0090
96 - 102	30 x 3	199 - 225	148 - 174	1,50	5,00	1,50	5,08	1	144 c c a c 0102
108	50 x 5	204 - 230	150 - 176	1,70	5,80	1,70	6,39	1	144 c c a g 0108
114	50 x 5	207 - 233	150 - 176	1,70	5,80	1,70	6,46	1	144 c c a g 0114
133	50 x 5	217 - 243	150 - 176	1,70	5,80	1,70	6,72	1	144 c c a g 0133
140	50 x 5	220 - 246	150 - 176	1,70	5,80	1,70	6,81	1	144 c c a g 0140
159	50 x 5	230 - 256	150 - 176	1,70	5,80	1,70	7,05	1	144 c c a g 0159
168	50 x 5	234 - 260	150 - 176	1,70	5,80	1,70	7,18	1	144 c c a g 0168
194	50 x 5	247 - 273	150 - 176	1,70	5,80	1,70	7,52	1	144 c c a g 0194
219	50 x 5	260 - 286	150 - 176	1,70	5,80	1,70	7,85	1	144 c c a g 0219

G galvanized
F hot-dip galvanized

Sliding support 100/300, HV1 100-125 with 2 pipe clamps, sound insulated

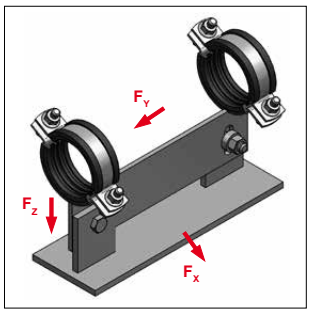

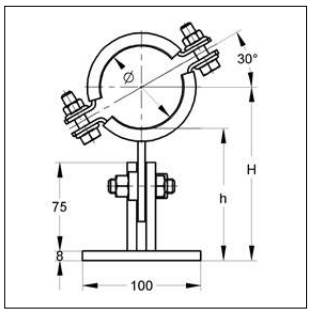

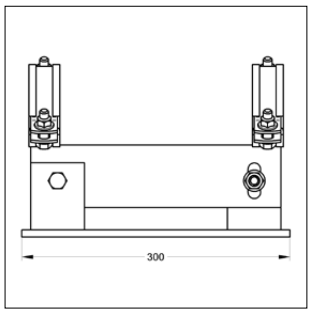

SCHALL-SCHUTZ DIN 4109

Baupc.offklasse ●B2● "Normal entflammbar" nach DIN 4102

Please quote
- G galvanized
- F hot-dip galvanized

108 b ☐ b 0219

Sliding support T 100/300
HV1 100-125, with 2 pipe clamps
sound insulated

Specification:

Closure:	Hexagon nut / closure-screw
Model:	T-support
Support-width:	100
Support-length	300
OD:	20 to 219 mm
Sound insulation:	for DIN 4109
Height, adjupc.able:	100 to 125 mm
Rec. tightening torque:	80 Nm
Delivery time:	on request

Technical data:

Material:	Steel
Material type:	S235JR
Surface:	galvanized hot-dip galvanized
Sound insulation lining.	Rubber TPE / (Ceramic tile on request)
Temperature resistance:	- 35 °C to + 100 °C
Global safety coefficient:	1,54

* F_x = momentfree
Loads at temperature > 100 °C on request

Clamping range [mm]	Material Pipe clamp [mm]	Pipe axis H [mm]	Lower edge Pipe h [mm]	max. load up to100°C* F_x [kN]	F_Z [kN]	F_Y [kN]	Weight (hot-dip galv.) [kg/Pc.]	Packing [Pc.]	Part-No.
20 - 25	25 x 3	112 - 138	99 - 125	1,60	1,60	1,60	4,21	1	144 a c b b 0025
26 - 30	25 x 3	114 - 140	99 - 125	1,60	1,60	1,60	4,24	1	144 a c b b 0030
31 - 36	25 x 3	117 - 143	99 - 125	1,60	1,60	1,60	4,26	1	144 a c b b 0036
38 - 45	25 x 3	122 - 148	99 - 125	1,60	1,60	1,60	4,30	1	144 a c b b 0045
47 - 51	25 x 3	125 - 151	99 - 125	1,60	1,60	1,60	4,35	1	144 a c b b 0051
53 - 57	25 x 3	128 - 154	99 - 125	1,60	1,60	1,60	4,38	1	144 a c b b 0057
58 - 64	25 x 3	131 - 157	99 - 125	1,40	4,80	1,40	4,40	1	144 a c b b 0064
65 - 70	30 x 3	134 - 160	99 - 125	1,40	4,80	1,40	4,64	1	144 a c b c 0070
72 - 78	30 x 3	138 - 164	99 - 125	1,40	4,80	1,40	4,69	1	144 a c b c 0078
84 - 90	30 x 3	144 - 170	99 - 125	1,40	4,80	1,40	4,76	1	144 a c b c 0090
94 - 100	30 x 3	149 - 175	99 - 125	1,40	4,80	1,40	4,83	1	144 a c b c 0100
102 - 106	30 x 3	152 - 178	99 - 125	1,40	4,80	1,40	4,88	1	144 a c b c 0106
108	50 x 5	155 - 181	101 - 127	1,70	5,80	1,70	6,36	1	144 a c b g 0108
114	50 x 5	158 - 184	101 - 127	1,70	5,80	1,70	6,45	1	144 a c b g 0114
133	50 x 5	168 - 194	101 - 127	1,70	5,80	1,70	6,75	1	144 a c b g 0133
140	50 x 5	171 - 197	101 - 127	1,70	5,80	1,70	6,86	1	144 a c b g 0140
159	50 x 5	181 - 207	101 - 127	1,70	5,80	1,70	7,15	1	144 a c b g 0159
168	50 x 5	185 - 211	101 - 127	1,70	5,80	1,70	7,29	1	144 a c b g 0168
194	50 x 5	198 - 224	101 - 127	1,70	5,80	1,70	7,69	1	144 a c b g 0194
219	50 x 5	211 - 237	101 127	1,70	5,80	1,70	8,08	1	144 a c b g 0219

- G galvanized
- F hot-dip galvanized

Sliding support 100/300, HV2 125-150 with 2 pipe clamps, sound insulated

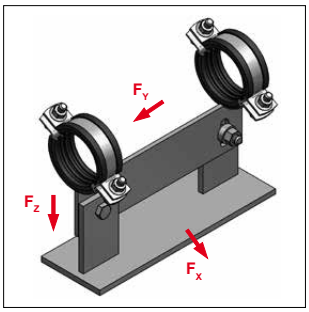

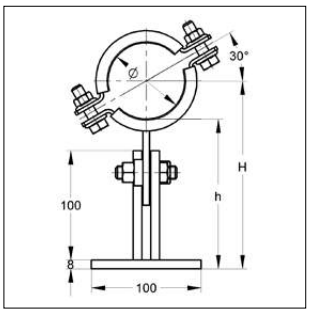

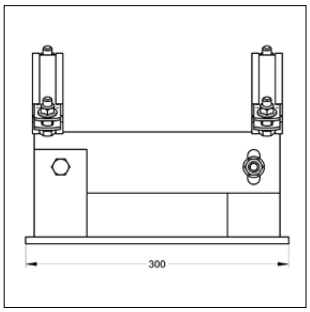

SCHALL-SCHUTZ DIN 4109

Baupc.offklasse B2 "Normal entflammbar" nach DIN 4102

Please quote
G galvanized
F hot-dip galvanized
108 b b b 0219

Sliding support T 100/300
HV2 125-150 with 2 pipe clamps
sound insulated

Specification:

Closure:	Hexagon nut / closure-screw
Model:	T-support
Support-width:	100
Support-length:	300
OD:	20 to 219 mm
Sound insulation:	for DIN 4109
Height, adjupc.able:	125 to 150 mm
Rec. tightening torque:	80 Nm
Delivery time:	on request

Technical data:

Material:	Steel
Material type:	S235JR
Surface:	galvanized hot-dip galvanized
Sound insulation lining:	Rubber TPE / Ceramic tile on request
Temperature resistance:	- 35 °C to + 100 °C
Global safety coefficient:	1,54

* F_x = momentfree
Loads at temperature > 100 °C on request

Clamping range [mm]	Material Pipe clamp [mm]	Pipe axis H [mm]	Lower edge Pipe h [mm]	max. load up to100°C* F_X [kN]	F_Z [kN]	F_Y [kN]	Weight (hot-dip galv.) [kg/Pc.]	Packing [Pc.]	Part-No.
20 - 25	25 x 3	137 - 163	124 - 150	1,60	1,60	1,60	4,39	1	144 b c b b 0025
26 - 30	25 x 3	139 - 165	124 - 150	1,60	1,60	1,60	4,42	1	144 b c b b 0030
31 - 36	25 x 3	142 - 168	124 - 150	1,60	1,60	1,60	4,45	1	144 b c b b 0036
38 - 45	25 x 3	147 - 173	124 - 150	1,60	1,60	1,60	4,48	1	144 b c b b 0045
47 - 51	25 x 3	150 - 176	124 - 150	1,60	1,60	1,60	4,53	1	144 b c b b 0051
53 - 57	25 x 3	153 - 179	124 - 150	1,60	1,60	1,60	4,56	1	144 b c b b 0057
58 - 64	25 x 3	156 - 182	124 - 150	1,60	1,60	1,60	4,59	1	144 b c b b 0064
65 - 70	30 x 3	159 - 185	124 - 150	1,40	4,80	1,40	4,83	1	144 b c b c 0070
72 - 78	30 x 3	163 - 189	124 - 150	1,40	4,80	1,40	4,87	1	144 b c b c 0078
84 - 90	30 x 3	169 - 195	124 - 150	1,40	4,80	1,40	4,95	1	144 b c b c 0090
94 - 100	30 x 3	174 - 200	124 - 150	1,40	4,80	1,40	5,01	1	144 b c b c 0100
102 - 106	30 x 3	177 - 203	124 - 150	1,40	4,80	1,40	5,06	1	144 b c b c 0106
108	50 x 5	180 - 206	126 - 152	1,70	5,80	1,70	6,55	1	144 b c b g 0108
114	50 x 5	183 - 209	126 - 152	1,70	5,80	1,70	6,64	1	144 b c b g 0114
133	50 x 5	193 - 219	126 - 152	1,70	5,80	1,70	6,93	1	144 b c b g 0133
140	50 x 5	196 - 222	126 - 152	1,70	5,80	1,70	7,05	1	144 b c b g 0140
159	50 x 5	206 - 232	126 - 152	1,70	5,80	1,70	7,34	1	144 b c b g 0159
168	50 x 5	210 - 236	126 - 152	1,70	5,80	1,70	7,47	1	144 b c b g 0168
194	50 x 5	223 - 249	126 - 152	1,70	5,80	1,70	7,88	1	144 b c b g 0194
219	50 x 5	236 - 262	126 - 152	1,70	5,80	1,70	8,26	1	144 b c b g 0219

G galvanized
F hot-dip galvanized

Sliding support 100/300, HV3 150-175 with 2 pipe clamps, sound insulated

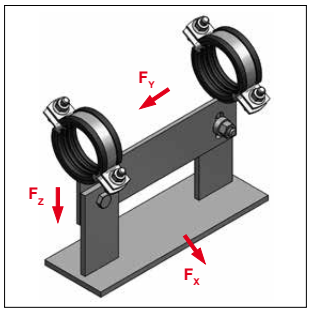

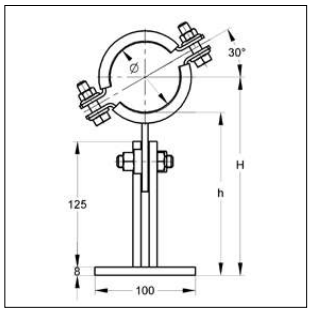

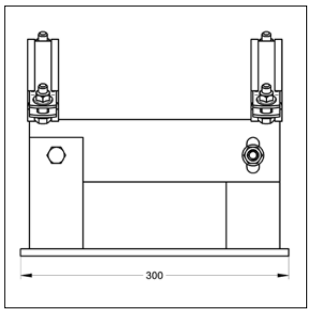

SCHALL-SCHUTZ DIN 4109

Baupc.offklasse B2 "Normal entflammbar" nach DIN 4102

Please quote
G galvanized
F hot-dip galvanized
108 b b 0219

Sliding support T 100/300
HV3 150-175, with 2 pipe clamps
sound insulated

Specification:

Closure:	Hexagon nut / closure-screw
Model:	T-support
Support-width:	100
Support-length:	300
OD:	20 to 219 mm
Sound insulation:	for DIN 4109
Height, adjupc.able:	150 to 175 mm
Rec. tightening torque:	80 Nm
Delivery time:	on request

Technical data:

Material:	Steel
Material type:	S235JR
Surface:	galvanized hot-dip galvanized
Sound insulation lining:	Rubber TPE / (Ceramic tile on request)
Temperature resistance:	- 35 °C to + 100 °C
Global safety coefficient:	1,54

* F_x = momentfree
Loads at temperature > 100 °C on request

Pipe-Ø [mm]	Material Pipe clamp [mm]	Pipe axis H [mm]	Lower edge Pipe h [mm]	max. load up to100°C* F_X [kN]	F_Z [kN]	F_Y [kN]	Weight (hot-dip galv.) [kg/Pc.]	Packing [Pc.]	Part-No.
20 - 25	25 x 3	162 - 188	149 - 175	1,60	1,60	1,60	4,60	1	144 c c b b 0025
26 - 30	25 x 3	164 - 190	149 - 175	1,60	1,60	1,60	4,63	1	144 c c b b 0030
31 - 36	25 x 3	167 - 193	149 - 175	1,60	1,60	1,60	4,66	1	144 c c b b 0036
38 - 45	25 x 3	172 - 198	149 - 175	1,60	1,60	1,60	4,69	1	144 c c b b 0045
47 - 51	25 x 3	175 - 201	149 - 175	1,60	1,60	1,60	4,74	1	144 c c b b 0051
53 - 57	25 x 3	178 - 204	149 - 175	1,60	1,60	1,60	4,77	1	144 c c b b 0057
58 - 64	25 x 3	181 - 207	149 - 175	1,60	1,60	1,60	4,80	1	144 c c b b 0064
65 - 70	30 x 3	184 - 210	149 - 175	1,40	4,80	1,40	5,04	1	144 c c b c 0070
72 - 78	30 x 3	188 - 214	149 - 175	1,40	4,80	1,40	5,08	1	144 c c b c 0078
84 - 90	30 x 3	194 - 220	149 - 175	1,40	4,80	1,40	5,16	1	144 c c b c 0090
94 - 100	30 x 3	199 - 225	149 - 175	1,40	4,80	1,40	5,22	1	144 c c b c 0100
102 - 106	30 x 3	202 - 228	149 - 175	1,40	4,80	1,40	5,27	1	144 c c b c 0106
108	50 x 5	205 - 231	151 - 177	1,70	5,80	1,70	6,76	1	144 c c b g 0108
114	50 x 5	208 - 234	151 - 177	1,70	5,80	1,70	6,85	1	144 c c b g 0114
133	50 x 5	218 - 244	151 - 177	1,70	5,80	1,70	7,14	1	144 c c b g 0133
140	50 x 5	221 - 247	151 - 177	1,70	5,80	1,70	7,26	1	144 c c b g 0140
159	50 x 5	231 - 257	151 - 177	1,70	5,80	1,70	7,55	1	144 c c b g 0159
168	50 x 5	235 - 261	151 - 177	1,70	5,80	1,70	7,68	1	144 c c b g 0168
194	50 x 5	248 - 274	151 - 177	1,70	5,80	1,70	8,09	1	144 c c b g 0194
219	50 x 5	261 - 267	151 - 177	1,70	5,80	1,70	8,47	1	144 c c b g 0219

G galvanized
F hot-dip galvanized

Sliding sledge

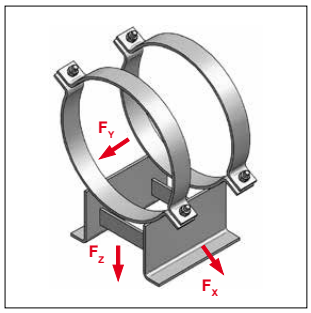

Sliding sledge

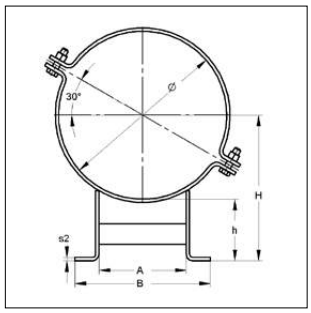

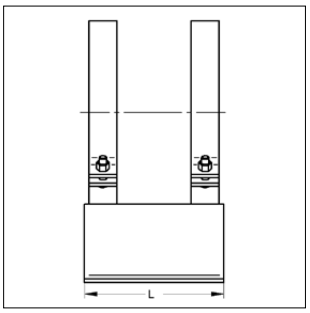

Please quote
R raw
G galvanized
F hot-dip galvanized
108 b ☐ b 0219

Specification:

Closure:	hexagon nut / closure-screw
Model:	Double-L-support
OD:	219 up to 813 mm
Delivery time:	on request

Technical data:

Material:	steel
Material type:	S235JR
Surface:	raw, galvanized hot-dip galvanized
Global safety coefficient:	1,54

* F_x = momentfree
Loads at temperature > 100 °C on request

Type A, h = 100 mm

Dimension	Material pipe clamp	Closure-screw	A	s2	L	B	H	max. load up to100°C* F_X	F_Z	F_Y	Weight (hot-dip galv.)	Packing	Part-No.
[mm]	[mm]		[mm]	[mm]	[mm]	[mm]	[mm]	[kN]	[kN]	[kN]	[kg/pc.]	[pc.]	
219	50 x 5	M12	130	6	270	246	210	4,90	8,50	4,90	8,73	1	108 a a 0219
273	50 x 5	M12	146	6	270	262	237	4,70	8,50	4,70	9,57	1	108 a a 0273
324	50 x 5	M12	159	6	270	275	262	4,40	8,50	4,40	10,30	1	108 a a 0324
356	50 x 5	M12	167	6	270	283	278	7,70	15,10	7,70	10,76	1	108 a a 0356
406	50 x 5	M12	202	8	270	318	303	7,90	15,10	7,90	14,20	1	108 a a 0406
457	50 x 5	M12	215	8	270	331	329	7,60	15,10	7,60	15,00	1	108 a a 0457
508	50 x 5	M12	227	8	390	343	354	10,60	21,80	10,60	18,53	1	108 a a 0508
610	70 x 10	M20	325	10	390	441	405	11,90	21,80	11,90	40,32	1	108 a a 0610
711	70 x 10	M20	352	10	470	468	456	21,10	40,00	21,10	46,60	1	108 a a 0711
813	70 x 10	M20	377	12	470	493	507	20,00	40,00	20,00	53,84	1	108 a a 0813

Type B, h = 150 mm

219	50 x 5	M12	130	6	270	246	260	4,00	8,50	4,00	10,14	1	108 b a 0219
273	50 x 5	M12	146	6	270	262	287	3,80	8,50	3,80	10,99	1	108 b a 0273
324	50 x 5	M12	159	6	270	275	312	3,70	8,50	3,70	11,72	1	108 b a 0324
356	50 x 5	M12	167	6	270	283	328	6,50	15,10	6,50	12,18	1	108 b a 0356
406	50 x 5	M12	202	8	270	318	353	6,80	15,10	6,80	16,06	1	108 b a 0406
457	50 x 5	M12	215	8	270	331	379	6,60	15,10	6,60	16,86	1	108 b a 0457
508	50 x 5	M12	227	8	390	343	404	9,20	21,80	9,20	21,10	1	108 b a 0508
610	70 x 10	M20	325	10	390	441	455	10,60	21,80	10,60	43,65	1	108 b a 0610
711	70 x 10	M20	352	10	470	468	506	19,00	40,00	19,00	50,61	1	108 b a 0711
813	70 x 10	M20	377	12	470	493	557	18,20	40,00	18,20	58,63	1	108 b a 0813

Type C, h = 200 mm

219	50 x 5	M12	130	6	270	246	310	3,30	8,50	3,30	11,55	1	108 c a 0219
273	50 x 5	M12	146	6	270	262	337	3,30	8,50	3,30	12,40	1	108 c a 0273
324	50 x 5	M12	159	6	270	275	362	3,20	8,50	3,20	13,13	1	108 c a 0324
356	50 x 5	M12	167	6	270	283	378	5,60	15,10	5,60	13,59	1	108 c a 0356
406	50 x 5	M12	202	8	270	318	403	5,90	15,10	5,90	17,92	1	108 c a 0406
457	50 x 5	M12	215	8	270	331	429	5,80	15,10	5,80	18,72	1	108 c a 0457
508	50 x 5	M12	227	8	390	343	454	8,20	21,80	8,20	23,90	1	108 c a 0508
610	70 x 10	M20	325	10	390	441	505	9,50	21,80	9,50	46,98	1	108 c a 0610
711	70 x 10	M20	352	10	470	469	556	17,30	40,00	17,30	54,63	1	108 c a 0711
813	70 x 10	M20	377	12	470	493	607	16,70	40,00	16,70	63,42	1	108 c a 0813

R raw G galvanized F hot-dip galvanized

Sliding sledge, sound insulated

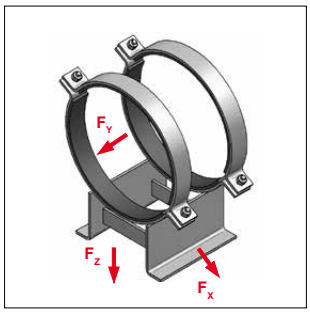

Sliding sledge, sound insulated

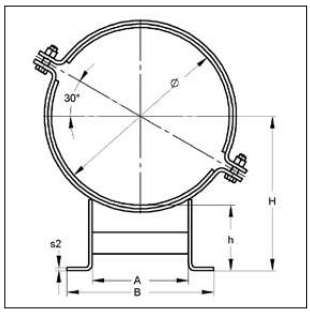

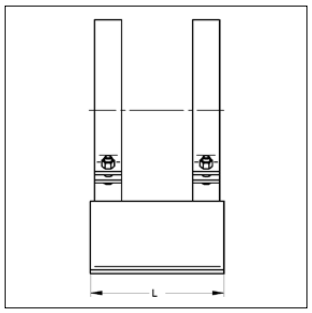

SCHALL-SCHUTZ DIN 4109

Baupc.offklasse B2 "Normal entflammbar" nach DIN 4102

Please quote
G galvanized
F hot-dip galvanized
108 b ☐ b 0219

02

Specification:

Closure:	Hexagon nut / closure-screw
Model:	Double-L-support
OD:	219 to 813 mm
Sound insulation:	for DIN 4109
Delivery time:	on request

Technical data:

Material:	Steel
Material type:	S235JR
Surface:	galvanized
	hot-dip galvanized
Sound insulation lining:	Rubber TPE / Ceramic tile on request
Temperature resistance:	- 35 °C to + 100 °C
Insulation thickness:	6 mm
Global safety coefficient:	1,54

* F_x = momentfree
Loads at temperature > 100 °C on request

Type A, h = 100 mm

Pipe-Ø	Material Pipe clamp	Closure-Screwn	A	s2	L	B	H	max. load up to100°C* F_X	F_Z	F_Y	Weight (hot-dip galv.)	Packing	Part-No.
[mm]	[mm]		[mm]	[mm]	[mm]	[mm]	[mm]	[kN]	[kN]	[kN]	[kg/Pc.]	[Pc.]	
219	50 x 5	M12	150	6	270	266	210	5,0	9,70	10,80	9,54	1	108 a b 0219
273	50 x 5	M12	168	6	270	284	237	5,0	9,70	9,60	10,46	1	108 a b 0273
324	50 x 5	M12	183	6	270	299	262	5,0	9,70	8,60	11,31	1	108 a b 0324
356	50 x 5	M12	192	6	270	308	278	5,0	9,70	16,00	11,85	1	108 a b 0356
406	50 x 5	M12	226	8	270	342	303	9,0	19,20	14,70	15,52	1	108 a b 0406
457	50 x 5	M12	240	8	270	356	329	9,0	19,20	13,50	16,44	1	108 a b 0457
508	50 x 5	M12	253	8	390	369	354	9,0	25,60	18,60	20,10	1	108 a b 0508
610	70 x 10	M20	355	10	390	471	405	14,0	40,00	25,40	45,08	1	108 a b 0610
711	70 x 10	M20	384	10	470	500	456	14,0	40,00	24,40	52,90	1	108 a b 0711
813	70 x 10	M20	411	12	470	527	507	14,0	40,00	21,90	60,98	1	108 a b 0813

Type B, h = 150 mm

219	50 x 5	M12	150	6	270	266	260	4,50	9,70	4,50	10,95	1	108 b b 0219
273	50 x 5	M12	168	6	270	284	287	4,10	9,70	4,10	11,87	1	108 b b 0273
324	50 x 5	M12	183	6	270	299	312	3,70	9,70	3,70	12,73	1	108 b b 0324
356	50 x 5	M12	192	6	270	308	328	7,20	9,70	7,20	13,27	1	108 b b 0356
406	50 x 5	M12	226	8	270	342	353	6,70	19,20	6,70	17,38	1	108 b b 0406
457	50 x 5	M12	240	8	270	356	379	6,20	19,20	6,20	18,30	1	108 b b 0457
508	50 x 5	M12	253	8	390	369	404	8,30	25,60	8,30	22,80	1	108 b b 0508
610	70 x 10	M20	355	10	390	471	455	7,30	25,60	7,30	49,16	1	108 b b 0610
711	70 x 10	M20	384	10	470	500	506	12,60	40,00	12,60	56,91	1	108 b b 0711
813	70 x 10	M20	411	12	470	527	557	11,50	40,00	11,50	65,77	1	108 b b 0813

G galvanized
F hot-dip galvanized

Sliding sledge, sound insulated

02

Type C, h = 200 mm

Pipe-Ø	Material Pipe clamp	Closure-Screwn	A	s2	L	B	H	max. load up to100°C*			Weight (hot-dip galv.)	Packing	Part-No.
								F_X	F_Z	F_Y			
[mm]	[mm]		[mm]	[mm]	[mm]	[mm]	[mm]	[kN]	[kN]	[kN]	[kg/Pc.]	[Pc.]	
219	60 x 6	M12	150	6	270	266	310	3,00	9,70	3,00	12,36	1	108 c b 0219
273	60 x 6	M12	168	6	270	284	337	2,70	9,70	2,70	13,28	1	108 c b 0273
324	60 x 6	M12	183	6	270	299	362	2,50	9,70	2,50	14,16	1	108 c b 0324
356	60 x 8	M12	192	6	270	308	378	4,90	9,70	4,90	14,68	1	108 c b 0356
406	60 x 8	M12	226	8	270	342	403	4,60	19,20	4,60	19,24	1	108 c b 0406
457	60 x 8	M12	240	8	270	356	429	4,40	19,20	4,40	20,16	1	108 c b 0457
508	70 x 10	M12	253	8	390	369	454	5,80	25,60	5,80	25,47	1	108 c b 0508
610	70 x 10	M20	355	10	390	471	505	5,20	25,60	5,20	52,49	1	108 c b 0610
711	70 x 10	M20	384	10	470	500	556	9,20	40,00	9,20	60,92	1	108 c b 0711
813	70 x 10	M20	411	12	470	527	607	8,40	40,00	8,40	70,55	1	108 c b 0813

Part-No. key:
- G galvanized
- F hot-dip galvanized

Sliding sledge, height adjustable

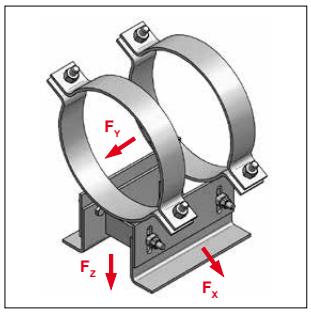

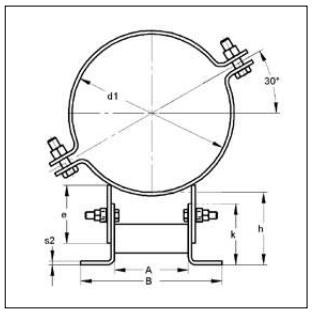

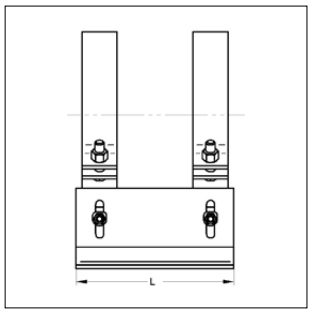

Sliding sledge, height adjustable

Please quote
R raw
G galvanized
F hot-dip galvanized
108 b □ b 0219

Specification:

Closure:	Hexagon nut / closure-screw
Model:	Double-L-support
OD:	219 to 813 mm
Height, adjustable:	100 to 150 mm
	150 to 200 mm
Rec. tightening torque (T-lock head):	120 Nm
Delivery time:	on request

Technical data:

Material:	steel
Material type:	S235JR
Surface:	raw, galvanized
	hot-dip galvanized
Global safety coefficient:	1,54

* F_x = momentfree
Loads at temperature > 100 °C on request

Type A, height level 1, adjustable height 100 to 150 mm

Pipe-Ø	Material Pipe clamp	Closure-Screwn	d1	A	s2	e	B	L	k	max. load up to100°C*			Weight (hot-dip galv.)	Packing	Part-No.
										F_X	F_Z	F_Y			
[mm]	[mm]		[mm]	[mm]	[mm]	[mm]	[mm]	[mm]	[mm]	[kN]	[kN]	[kN]	[kg/Pc.]	[Pc.]	
219	50 x 5	M12	219	134	6	100	250	270	115	5,40	9,70	10,80	11,85	1	143 a a 0219
273	50 x 5	M12	273	153	6	100	269	270	115	4,80	9,70	9,60	12,64	1	143 a a 0273
324	50 x 5	M12	324	169	6	100	285	270	115	4,30	9,70	8,60	13,39	1	143 a a 0324
356	50 x 5	M12	356	178	6	100	294	270	115	8,00	9,70	16,00	13,85	1	143 a a 0356
406	50 x 5	M12	407	207	8	100	323	270	121	7,30	19,20	14,70	18,12	1	143 a a 0406
457	50 x 5	M12	457	222	8	100	338	270	121	6,70	19,20	13,50	18,93	1	143 a a 0457
508	50 x 5	M12	508	235	8	100	351	390	121	9,30	25,60	18,60	24,14	1	143 a a 0508
610	70 x 10	M20	610	325	10	100	441	390	135	12,70	40,00	25,40	47,12	1	143 a a 0610
711	70 x 10	M20	711	354	10	100	470	470	135	12,20	40,00	24,40	54,75	1	143 a a 0711
813	70 x 10	M20	813	377	12	100	493	470	135	10,50	40,00	21,90	63,45	1	143 a a 0813

Type B, height level 2, adjustable height 150 to 200 mm

219	50 x 5	M12	219	134	6	150	250	270	115	2,20	9,70	4,50	13,26	1	143 b a 0219
273	50 x 5	M12	273	153	6	150	269	270	115	2,00	9,70	4,10	14,05	1	143 b a 0273
324	50 x 5	M12	324	169	6	150	285	270	115	1,80	9,70	3,70	14,80	1	143 b a 0324
356	50 x 5	M12	356	178	6	150	294	270	115	3,60	9,70	7,20	15,26	1	143 b a 0356
406	50 x 5	M12	407	207	8	150	323	270	121	3,30	19,20	6,70	20,30	1	143 b a 0406
457	50 x 5	M12	457	222	8	150	338	270	121	3,30	19,20	6,70	21,11	1	143 b a 0457
508	50 x 5	M12	508	235	8	150	351	390	121	4,10	25,60	8,30	26,82	1	143 b a 0508
610	70 x 10	M20	610	325	10	150	441	390	135	3,60	25,60	7,30	50,39	1	143 b a 0610
711	70 x 10	M20	711	354	10	150	470	470	135	6,30	40,00	12,60	58,76	1	143 b a 0711
813	70 x 10	M20	813	377	12	150	493	470	135	5,50	40,00	11,50	68,24	1	143 b a 0813

R raw
G galvanized
F hot-dip galvanized

Sliding sledge height adjustable, sound insulated

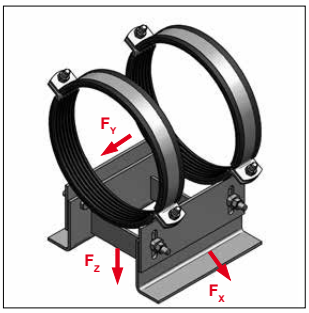

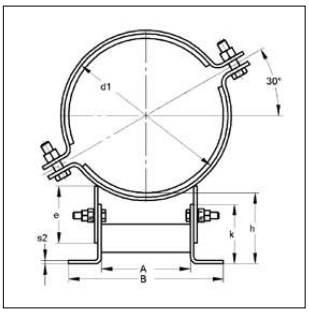

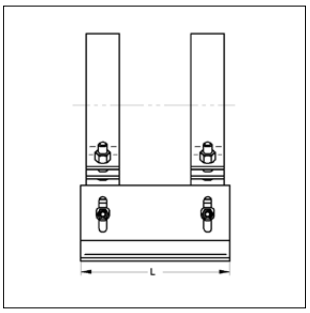

Sliding sledge, sound insulated

SCHALL-SCHUTZ DIN 4109

Baupc.offklasse B2 "Normal entflammbar" nach DIN 4102

Please quote
G galvanized
F hot-dip galvanized
108 b ☐ b 0219

Specification:

Closure:	Hexagon nut / closure-screw
Model:	Double-L-support
OD:	219 to 813 mm
Sound insulation:	for DIN 4109
Height, adjustable:	100 to 150 mm
	150 to 200 mm
Rec. tightening torque	
(T-lock head):	120 Nm
Delivery time:	on request

Technical data:

Material:	steel
Material type:	S235JR
Surface:	galvanized
	hot-dip galvanized
Sound insulation lining:	Rubber TPE / Ceramic tile on request
Temperature resistance:	- 35 °C to + 100 °C
Insulation thickness:	6 mm
Global safety coefficient:	1,54

* F_x = momentfree
Loads at temperature > 100 °C on request

Type A, height level 1, adjustable height 100 to 150 mm

Pipe-Ø [mm]	Material Pipe clamp [mm]	Closure-Screwn	d1 [mm]	A [mm]	s2 [mm]	e [mm]	B [mm]	L [mm]	k [mm]	max. load up to100°C* F_X [kN]	F_Z [kN]	F_Y [kN]	Weight (hot-dip galv.) [kg/Pc.]	Packing [Pc.]	Part-No.
219	50 x 5	M12	231	152	6	100	268	270	115	5,40	9,70	10,80	12,58	1	143 a b 0219
273	50 x 5	M12	285	172	6	100	288	270	115	4,80	9,70	9,60	13,51	1	143 a b 0273
324	50 x 5	M12	336	190	6	100	306	270	115	4,30	9,70	8,60	14,38	1	143 a b 0324
356	50 x 5	M12	368	200	6	100	316	270	115	8,00	9,70	16,00	14,93	1	143 a b 0356
406	50 x 5	M12	418	229	8	100	345	270	121	7,30	19,20	14,70	19,42	1	143 a b 0406
457	50 x 5	M12	469	244	8	100	360	270	121	6,70	19,20	13,50	20,35	1	143 a b 0457
508	50 x 5	M12	520	259	8	100	375	390	121	9,30	25,60	18,60	25,69	1	143 a b 0508
610	70 x 10	M20	626	353	10	100	469	390	135	12,70	40,00	25,40	52,62	1	143 a b 0610
711	70 x 10	M20	727	384	10	100	500	470	135	12,20	40,00	24,40	61,02	1	143 a b 0711
813	70 x 10	M20	829	410	12	100	526	470	135	10,50	40,00	21,90	70,58	1	143 a b 0813

Type B, height level 2, adjustable height 150 to 200 mm

219	50 x 5	M12	231	152	6	150	268	270	115	2,20	9,70	4,50	14,00	1	143 b b 0219
273	50 x 5	M12	285	172	6	150	288	270	115	2,00	9,70	4,10	14,93	1	143 b b 0273
324	50 x 5	M12	336	190	6	150	306	270	115	1,80	9,70	3,70	15,80	1	143 b b 0324
356	50 x 5	M12	368	200	6	150	316	270	115	3,60	9,70	7,20	16,35	1	143 b b 0356
406	50 x 5	M12	418	229	8	150	345	270	121	3,30	19,20	6,70	21,60	1	143 b b 0406
457	50 x 5	M12	469	244	8	150	360	270	121	3,30	19,20	6,20	22,53	1	143 b b 0457
508	50 x 5	M12	520	259	8	150	375	390	121	4,10	25,60	8,30	28,38	1	143 b b 0508
610	70 x 10	M20	626	353	10	150	469	390	135	3,60	25,60	7,30	55,89	1	143 b b 0610
711	70 x 10	M20	727	384	10	150	500	470	135	6,30	40,00	12,60	65,03	1	143 b b 0711
813	70 x 10	M20	829	410	12	150	526	470	135	5,50	40,00	11,50	75,37	1	143 b b 0813

G galvanized
F hot-dip galvanized

Phone +49 7944 64-0
MEFA
Fax +49 7944 64-37

Guiding Clamp-Set

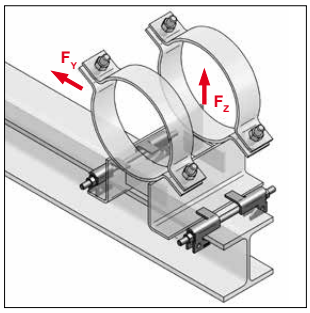

Guiding Clamp-Set type A
(assembled)

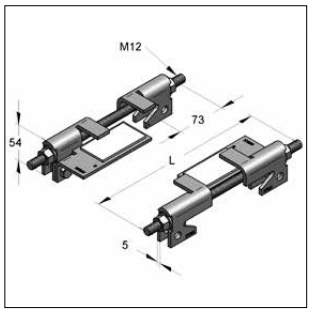

Guiding Clamp-Set type 2A

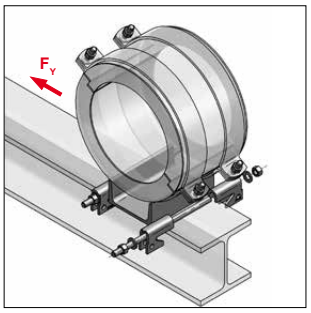

Guiding Clamp-Set type B
(assembled)

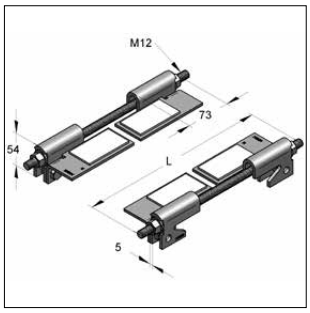

Guiding Clamp-Set type 4B

Specification

Application:	for lateral guidance of sliding sledges and sliding supports on girder
Consisting of:	guiding clamps, threaded pins, nuts, washers, sliding bases
Recommended torque:	64 Nm
Remark:	Not suitable for hanging installation!

Technical data:

Material:	steel
Material type:	S235JR
Surface	
- guiding clamps:	hot-dip galvanized
- screwing:	zinc-nickel
Material sliding body:	PE - UHMW
Static friction factor:	0,20
Slide friction factor:	0,15
Temperature resistance:	- 200 °C to + 80 °C
Global safety coefficient:	1,54

Identification	suitable for girder HEA	HEB	IPE	max. sliding plate thickness [mm]	PE sliding base	threaded pin M x L [mm]	max. load F_Z [kN]	F_Y [kN]	Weight [kg/Pc.]	Packing [Pc.]	Part-No.
Guide bearing with lift lock											
Type A I	100 - 140	100 - 120	200 - 240	18	-	M12 x 220	3,5	4,0	1,50	1	14710001
Type A II	160 - 180	140 - 160	270 - 330	18	-	M12 x 270	3,5	4,0	1,57	1	14710002
Type A III	200	180 - 200	360 - 400	18	-	M12 x 310	3,5	4,0	1,63	1	14710003
Guide bearing with lift lock, with sliding base											
Type 2A I	100 - 140	100 - 120	200 - 240	12	2x	M12 x 220	3,5	4,0	2,06	1	14710004
Type 2A II	160 - 180	140 - 160	270 - 330	12	2x	M12 x 270	3,5	4,0	2,13	1	14710005
Type 2A III	200	180 - 200	-	12	2x	M12 x 310	3,5	4,0	2,19	1	14710006
Type 4A III	200	180 - 200	360 - 400	12	4x	M12 x 310	3,5	4,0	2,75	1	14710007
Type 2AC I	-	-	140 - 220	12	2x	M12 x 220	1,75	4,0	1,75	1	14712002
Floating bearing without lift lock											
Type B I	100 - 140	100 - 120	200 - 240	-	-	M12 x 220	-	4,0	1,50	1	14711001
Type B II	160 - 180	140 - 160	270 - 330	-	-	M12 x 270	-	4,0	1,57	1	14711002
Type B III	200	180 - 200	360 - 400	-	-	M12 x 310	-	4,0	1,63	1	14711003
Type B IV	300 - 400	200 - 300	450 - 600	-	-	M16 x 500	-	4,0	3,51	1	147110034
Floating bearing without lift lock, with sliding base											
Type 2B I	100 - 140	100 - 120	200 - 240	-	2x	M12 x 220	-	4,0	2,06	1	14711004
Type 2B II	160 - 180	140 - 160	270 - 330	-	2x	M12 x 270	-	4,0	2,13	1	14711005
Type 4B	200	180 - 200	360 - 400	-	4x	M12 x 310	-	4,0	2,75	1	14711007
Type 4B IV	300 - 400	200 - 300	450 - 600	-	4x	M16 x 500	-	4,0	4,63	1	14711008

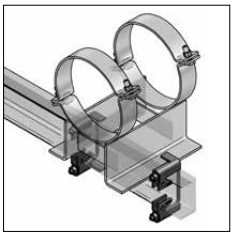

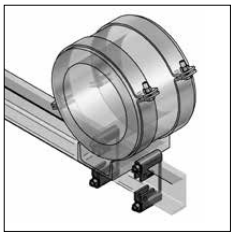

On request also for U-steel girder

Polar plus sliding sledge U120 / U140

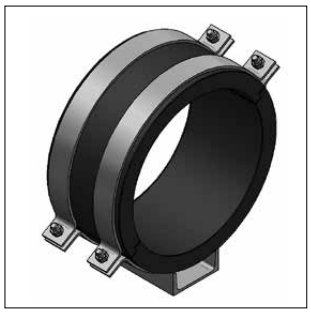

Polar plus sliding sledge 140

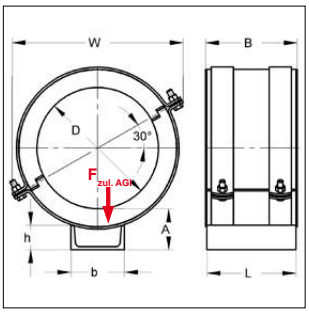

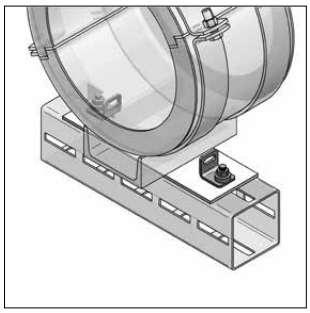

Example: floating bearing
(without lift lock)

the insulated pipe clamps
of MEFA are special designed
on customer request, no
exchange or return.

Delivery time
and variant demand
on request!

Sliding stripes see on page 2/3

Specification:

Application area:	Load-bearing sliding sledge with welded U-profiles for direct sliding on substructure
Remark:	Operating loads according AGI

Technical data:

Material insulated pipe clamp:	PU-hard foam with diffusion-tight coating and front-side rubber lamination.
Material pipe bracket:	steel / S235JR
Surface:	galvanized
Global safety coefficient:	1,54

Insulation thickness 40 mm

OD Steel [mm]	Shell lenght B [mm]	Material pipe clamp	U-Steel b x h x L [mm]	Dimension A [mm]	Dimension W [mm]	max. load $F_{zul. AGI}$ [kN]	Weight [kg/Pc.]	Packing [Pc.]	Part-No.
219,1	181	50 x 5,0	120 x 55 x 175	90	336	8,9	7,81	1	74742219
273,0	206	50 x 5,0	120 x 55 x 200	93	384	10,5	9,31	1	74742273
323,9	226	50 x 5,0	140 x 60 x 220	96	427	12,0	11,16	1	74742324
355,6	226	60 x 6,0	140 x 60 x 220	98	498	15,6	16,00	1	74742356
406,4	226	60 x 6,0	140 x 60 x 220	99	538	17,4	17,20	1	74742406
457,0	226	60 x 6,0	140 x 60 x 220	99	585	19,2	18,41	1	74742457

On request

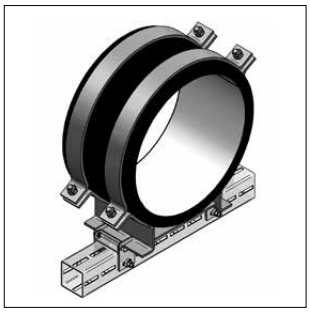

Polar plus sliding sledge

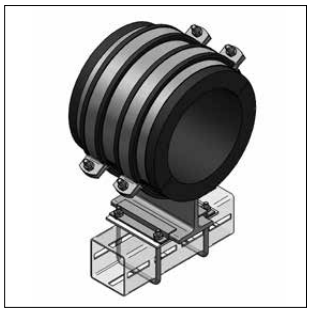

Foamglas sliding sledge

Insulation-saddle for roller-bearing

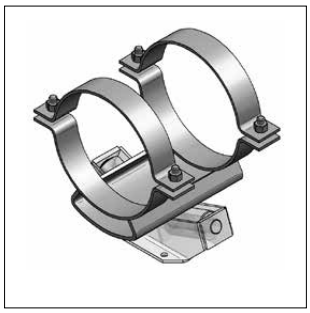

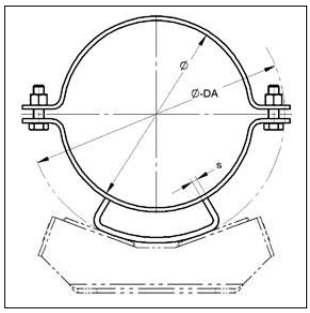

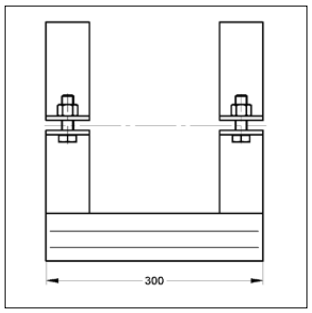

Please quote
R raw
G galvanized
F hot-dip galvanized
108 b b 0219

Insulation-saddle for roller-bearing

Specification:

Closure:	Hexagon nut / closure-screw
OD:	219 to 813 mm
Delivery time:	on request

Technical data:

Material:	steel
Material type:	S235JR
Surface:	raw, galvanized hot-dip galvanized

Pipe-Ø [mm]	for Insulation-thickness [mm]	s [mm]	Material pipe clamp [mm]	Ø-OD [mm]	Weight [kg/Pc.]	Packing [Pc.]	Part-No.
219	50	6	60 x 6	320	9,87	1	149 a a e 0219
	80	6	60 x 6	380	11,30	1	149 a a h 0219
	100	6	60 x 6	420	12,26	1	149 a a k 0219
	120	6	60 x 6	460	13,22	1	149 a a m 0219
	150	6	60 x 6	520	14,66	1	149 a a p 0219
273	50	8	60 x 6	375	12,61	1	149 a a e 0273
	80	8	60 x 6	435	14,51	1	149 a a h 0273
	100	8	60 x 6	475	15,78	1	149 a a k 0273
	120	8	60 x 6	515	17,04	1	149 a a m 0273
	150	8	60 x 6	575	18,92	1	149 a a p 0273
324	50	10	60 x 6	425	15,42	1	149 a a e 0324
	80	10	60 x 6	485	17,77	1	149 a a h 0324
	100	10	60 x 6	525	19,33	1	149 a a k 0324
	120	10	60 x 6	565	20,90	1	149 a a m 0324
	150	10	60 x 6	625	23,24	1	149 a a p 0324
356	50	12	60 x 8	460	20,41	1	149 a a e 0356
	80	12	60 x 8	520	23,21	1	149 a a h 0356
	100	12	60 x 8	560	25,08	1	149 a a k 0356
	120	12	60 x 8	600	26,94	1	149 a a m 0356
	150	12	60 x 8	660	29,74	1	149 a a p 0356
406	50	12	60 x 8	510	22,54	1	149 a a e 0406
	80	12	60 x 8	570	25,27	1	149 a a h 0406
	100	12	60 x 8	610	27,21	1	149 a a k 0406
	120	12	60 x 8	650	29,08	1	149 a a m 0406
	150	12	60 x 8	710	31,88	1	149 a a p 0406

R raw
G galvanized
F hot-dip galvanized

Insulation-saddle for roller-bearing

Pipe-Ø [mm]	for Insulation-thickness [mm]	s [mm]	Material pipe clamp [mm]	Ø-OD [mm]	Weight [kg/Pc.]	Packing [Pc.]	Part-No.
457	50	15	60 x 8	560	26,83	1	149 a a e 0457
	80	15	60 x 8	620	30,33	1	149 a a h 0457
	100	15	60 x 8	660	32,64	1	149 a a k 0457
	120	15	60 x 8	700	34,96	1	149 a a m 0457
	150	15	60 x 8	760	38,44	1	149 a a p 0457
508	50	15	70 x 10	610	36,48	1	149 a a e 0508
	80	15	70 x 10	670	39,97	1	149 a a h 0508
	100	15	70 x 10	710	42,28	1	149 a a k 0508
	120	15	70 x 10	750	44,60	1	149 a a m 0508
	150	15	70 x 10	810	48,12	1	149 a a p 0508
610	50	15	70 x 10	710	42,20	1	149 a a e 0610
	80	15	70 x 10	770	45,68	1	149 a a h 0610
	100	15	70 x 10	810	48,00	1	149 a a k 0610
	120	15	70 x 10	850	50,33	1	149 a a m 0610
	150	15	70 x 10	910	53,82	1	149 a a p 0610
711	50	15	70 x 10	815	48,26	1	149 a a e 0711
	80	15	70 x 10	875	51,75	1	149 a a h 0711
	100	15	70 x 10	915	54,07	1	149 a a k 0711
	120	15	70 x 10	955	56,40	1	149 a a m 0711
	150	15	70 x 10	1015	59,88	1	149 a a p 0711
813	50	15	70 x 10	915	54,02	1	149 a a e 0813
	80	15	70 x 10	975	57,50	1	149 a a h 0813
	100	15	70 x 10	1015	59,83	1	149 a a k 0813
	120	15	70 x 10	1055	62,14	1	149 a a m 0813
	150	15	70 x 10	1115	65,64	1	149 a a p 0813

R	raw
G	galvanized
F	hot-dip galvanized

Single-roller bearings

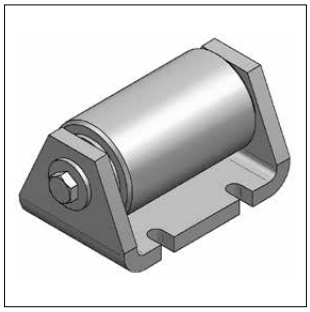

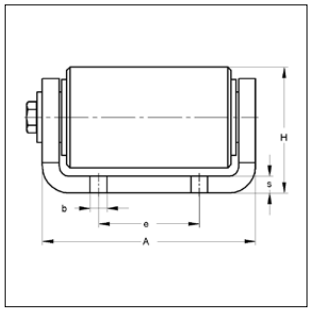

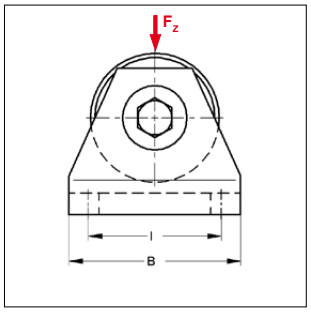

Please quote
R raw
G galvanized
F hot-dip galvanized
108 b ☐ b 0219

Single-roller-bearings

Specification:
Delivery time: on request

Technical data:

Material:	steel
Material type:	S235JR
Surface:	raw, galvanized, hot-dip galvanized
Material axle:	stainless steel, polished
Material bush:	bronze
Global safety coefficient:	1,54

Roller width	Dimensions				Connection-measures			max. load	Weight	Packing	Part-No.	
	A	B	H	s	b	e	l	F_z				
[mm]	[mm]	[mm]	[mm]	[mm]	mm	[mm]	[mm]	[kN]	[kg/pc.]	[pc.]		
70	94	60	50	6	8	50	45	5	1,00	1	150 s	060070
100	126	80	75	10	10	60	60	15	3,40	1	150 s	080100
140	172	100	90	10	12	80	80	25	5,00	1	150 s	100140
170	218	130	125	12	14	100	100	50	14,00	1	150 s	130170

R raw G galvanized F hot-dip galvanized

On request:

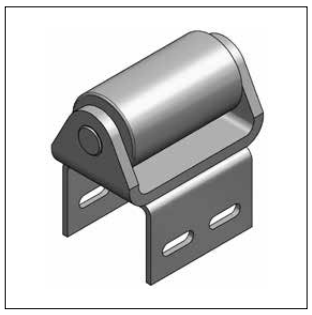

Single-roller-bearings
with CENTUM® Massive connector

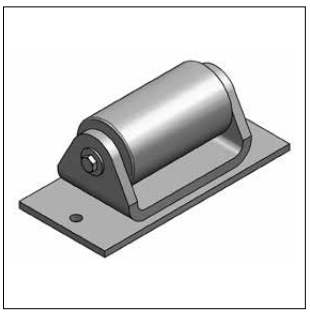

Single-roller-bearings
with welded base plate

Double-roller bearing, axial

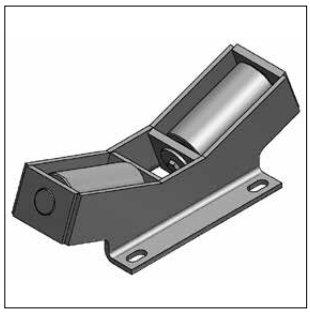

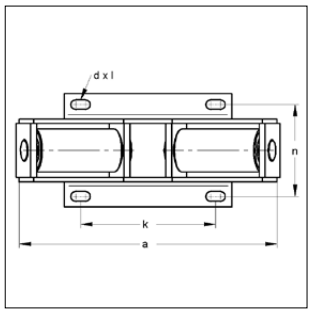

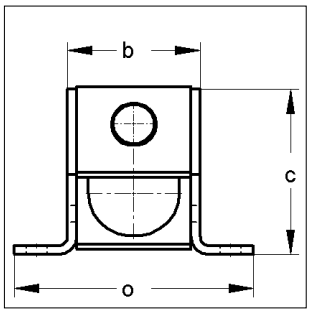

Please quote
R raw
G galvanized
F hot-dip galvanized
108 b ☐ b 0219

Double-roller-bearing, axial

Specification:
If roller-bearing is welded at construction body, please pay attention, that no welding current flows through bearing body.
Load input of lateral forces up to 35% of bearing loads.

Delivery time: on request

Technical data:

Material:	steel
Material type:	S235JR
Surface:	raw, galvanized, hot-dip galvanized
Material axle:	stainless steel, polished
Material bush:	bronze
Global safety coefficient:	1,54

* see column ØDA for Insulation-saddle

Bearing-Ø* [mm]	Load type	max. load [kN]	Dimensions a [mm]	b [mm]	c [mm]	o [mm]	Connection-measures d x l [mm]	k [mm]	n [mm]	Weight [kg/Pc.]	Packing [Pc.]	Part-No.
219 - 406	DR 005	5	220	68	86	130	12 x 24	110	100	3,90	1	150 d 040406
323 - 660	DR 015	15	335	82	109	150	14 x 28	170	120	9,00	1	150 d 050660
	DR 025	25	335	82	109	150	14 x 28	170	120	9,10	1	150 d 060660
508 - 965	DR 025	25	478	112	145	200	18 x 36	250	160	20,60	1	150 d 060965
	DR 050	50	478	116	145	210	18 x 36	250	170	22,50	1	150 d 080965
	DR 100	100	478	120	145	220	18 x 36	250	180	24,30	1	150 d 100965
813 - 1350	DR 050	50	652	154	195	258	23 x 46	360	208	54,70	1	150 d 081350
	DR 100	100	652	158	195	268	23 x 46	360	218	59,20	1	150 d 101350
	DR 200	200	652	162	195	278	23 x 46	360	228	61,30	1	150 d 121350
1120 - 1920	DR 100	100	870	190	274	330	27 x 54	500	270	109,30	1	150 d 101920
	DR 200	200	870	194	274	340	27 x 54	500	280	115,10	1	150 d 121920
	DR 300	300	870	200	274	350	27 x 54	500	290	124,20	1	150 d 151920

R raw G galvanized F hot-dip galvanized

on Request:

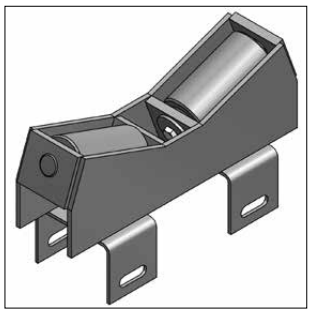

Doubel-roller bearing, axial
with CENTUM-connection

Double-roller bearing, radial-axial

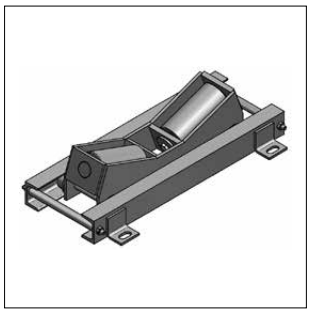

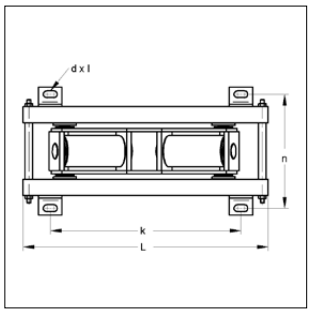

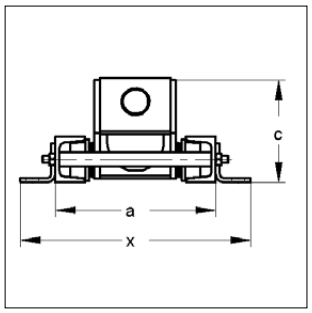

Please quote
R raw
G galvanized
F hot-dip galvanized
108 b b 0219

Double-roller bearing
radial-axial

Specification:
Bearing loads applies for medium diameters and evenly load distributions.

Delivery time: on request

* see column ØDA for Insulation-saddle

Technical data:

Material:	steel
Material type:	S235JR
Surface:	raw, galvanized, hot-dip galvanized
Material axle:	stainless steel, polished
Material bush:	bronze

Bearing-Ø* [mm]	Load type	Motion [mm]	Dimension a [mm]	x [mm]	c [mm]	L [mm]	Connection-measures k [mm]	n [mm]	d x L [mm]	Weight [kg/Pc.]	Packing [Pc.]	Part-No.
114 - 273	DRX003	100	156	232	76	320	180	204	14 x 27	9,00	1	150 x a 030273
	DRX003	200	156	232	76	420	280	204	14 x 27	9,10	1	150 x b 030273
	DRX003	300	156	232	76	520	380	204	14 x 27	10,20	1	150 x c 030273
219 - 406	DRX005	100	168	244	86	370	230	216	14 x 27	10,50	1	150 x a 040406
	DRX005	200	168	244	86	470	330	216	14 x 27	11,60	1	150 x b 040406
	DRX005	300	168	244	86	570	430	216	14 x 27	12,70	1	150 x c 040406
323 - 660	DRX015	100	182	250	109	485	345	230	14 x 27	16,90	1	150 x a 050660
	DRX015	200	182	250	109	585	445	230	14 x 27	18,00	1	150 x b 050660
	DRX015	300	182	250	109	685	545	230	14 x 27	19,10	1	150 x c 050660
	DRX025	100	182	250	109	485	345	230	14 x 27	16,90	1	150 x a 060660
	DRX025	200	182	250	109	585	445	230	14 x 27	18,10	1	150 x b 060660
	DRX025	300	182	250	109	685	545	230	14 x 27	19,20	1	150 x c 060660
508 - 965	DRX025	100	222	322	145	630	490	286	18 x 36	33,30	1	150 x a 060965
	DRX025	200	222	322	145	730	590	286	18 x 36	34,70	1	150 x b 060965
	DRX025	300	222	322	145	830	690	286	18 x 36	36,10	1	150 x c 060965
	DRX050	100	228	328	145	630	490	292	18 x 36	35,10	1	150 x a 080965
	DRX050	200	228	328	145	730	590	292	18 x 36	36,50	1	150 x b 080965
	DRX050	300	228	328	145	830	690	292	18 x 36	38,00	1	150 x c 080965
	DRX100	100	232	332	145	630	490	296	18 x 36	37,10	1	150 x a 100965
	DRX100	200	232	332	145	730	590	296	18 x 36	38,50	1	150 x b 100965
	DRX100	300	232	332	145	830	690	296	18 x 36	39,90	1	150 x c 100965
813 - 1350	DRX050	100	266	386	195	805	645	340	23 x 46	70,40	1	150 x a 081350
	DRX050	200	266	386	195	905	745	340	23 x 46	71,80	1	150 x b 081350
	DRX050	300	266	386	195	1005	845	340	23 x 46	73,30	1	150 x c 081350
	DRX100	100	270	390	195	805	645	344	23 x 46	74,10	1	150 x a 101350
	DRX100	200	270	390	195	905	745	344	23 x 46	75,60	1	150 x b 101350
	DRX100	300	270	390	195	1005	845	344	23 x 46	77,00	1	150 x c 101350
	DRX200	100	274	394	195	805	645	348	23 x 46	78,00	1	150 x a 121350
	DRX200	200	274	394	195	905	745	348	23 x46	79,40	1	150 x b 121350
	DRX200	300	274	394	195	1005	845	348	23 x 46	80,90	1	150 x c 121350

R raw G galvanized F hot-dip galvanized

02

Double-roller bearings, radial-axial

Bearing-Ø* [mm]	Load type	Motion [mm]	Dimension a [mm]	x [mm]	c [mm]	L [mm]	Connection-measures k [mm]	n [mm]	d x L [mm]	Weight [kg/Pc.]	Packing [Pc.]	Part-No.
1120 - 1920	DRX100	100	308	438	274	1030	870	384	27 x 54	134,30	1	150 x a 101920
	DRX100	200	308	438	274	1130	970	384	27 x 54	136,00	1	150 x b 101920
	DRX100	300	308	438	274	1230	1070	384	27 x 54	137,70	1	150 x c 101920
	DRX200	100	312	442	274	1030	870	388	27 x 54	141,20	1	150 x a 121920
	DRX200	200	312	442	274	1130	970	388	27 x 54	143,00	1	150 x b 121920
	DRX200	300	312	442	274	1230	1070	388	27 x 54	144,70	1	150 x c 121920
	DRX300	100	318	448	274	1030	870	394	27 x 54	151,70	1	150 x a 151920
	DRX300	200	318	448	274	1130	970	394	27 x 54	153,40	1	150 x b 151920
	DRX300	300	318	448	274	1230	1070	394	27 x 54	155,10	1	150 x c 151920

R raw
G galvanized
F hot-dip galvanized

Double-roller bearing holder with CENTUM® connection

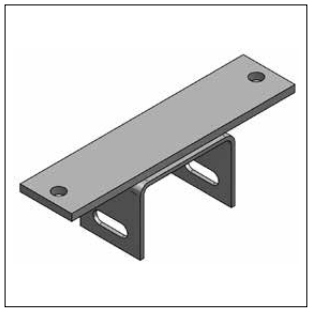

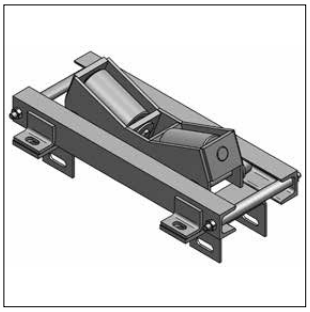

Double-Roller bearing holder
with CENTUM connection

Specification:

Application area:	option to connect roller bearing with profile rail
Accessory:	t-lock, toothed M12x40 (connection to CENTUM)
Scope of delivery:	2 roller bearing holder 4 hexagon screw M12x40 4 hexagon nut M12

Technical data:

Material:	steel
Material type:	S235JR
Surface:	hot-dip galvanized
Delivery time:	on request
Remark:	for each double roller bearing two roller bearing being needed

Pipe clamps

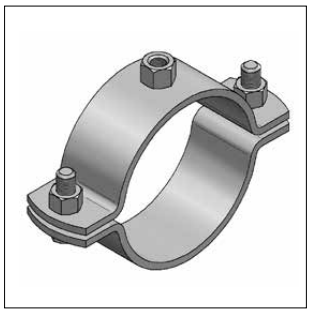

Pipe clamp Titan HD, unlined
Page 3/2

Pipe clamp Titan HD, lined
Page 3/4

Pipe clamp Form A,
type Maxima / Titan HD
Page 3/7

Pipe clamp Form A,
type TGA
Page 3/9

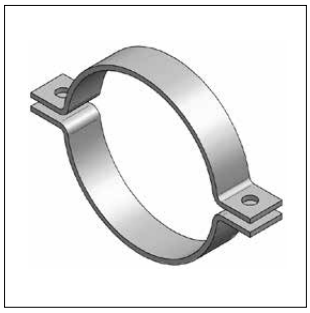

Pipe clamp form A, DIN 3567,
unlined
Page 3/11

Glass fiber lining
Page 3/12

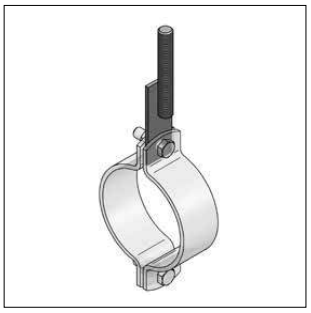

Locking lip adaptor
Page 3/12

Mounting unit / Hanger chain
Page 3/13

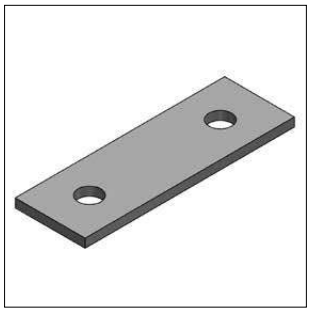

2-hole Connecting plate
Page 3/13

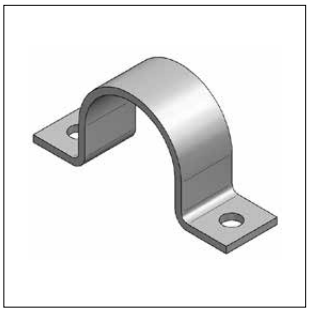

Stirrup clamp
Page 3/14

U-bolt
Page 3/15

Tightening torque of locking screws for pipe clamps

All locking screws of pipe clamps must be tightened uniformly with a torque according to table 1 depending on the size of screw. Only when these tightening torques are observed, loads specified in the technical documentation being ensured.

Table 1: tightening torque

Screw size	Tightening torque
M4	1 Nm
M5	2 Nm
M6	2 Nm
M8	3 Nm
M10	5 Nm
M12	10 Nm
M16	20 Nm
M20	25 Nm
M24	25 Nm

Torque values applying to clamps with pure tensile load only, not applying to clamps with axial load.

Pipe clamp Titan HD, unlined

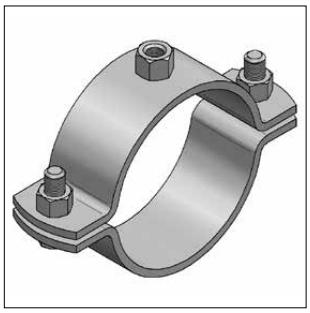

Pipe clamp Titan HD, unlined

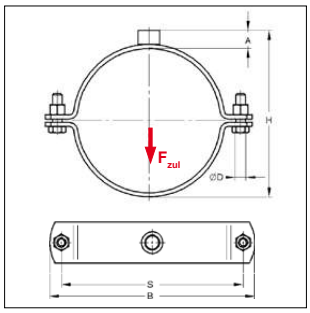

RAL GÜTEZEICHEN RAL-GZ 655-B

RAL GÜTEZEICHEN RAL-GZ 656

Related fire loads see chapter 15
MEFA product catalogue „fixing systems“

Delivery time:
5 working days, ex works Kupferzell (pipe clamps Titan HD are special designed on customer‘ request, no exchange or return).
Variant demand on request!

03

Specification:

Closure:	screwed closure
Construction method:	two-part
OD:	64 up to 508 mm
Connection:	M12, M16, 1/2", 1", 1 1/4"

Technical data:

Material:	steel
Material type:	S235JRG2
Surface:	galvanized

[1] Components for outdoor application also available with Zinc-Nickel-coating (corrosion-protection class C3 acc. to ISO 9223). Delivery time on demand!

Connection: Thread M16 — **without sound insulation lining**

Dimension [mm]	Dimension [Inch]	Material [mm]	Closure-screw	max. load F_{max} [kN]	H [mm]	A [mm]	B [mm]	S [mm]	D [mm]	Weight [kg/pc.]	Packing [pc.]	Part-No.
64		50x5,0	M12	6,00	89	20	141	112	13	0,79	1	0071515
76	2 1/2	50x5,0	M12	6,00	101	20	154	125	13	0,86	1	0071519
89	3	50x5,0	M12	6,00	114	20	167	138	13	0,95	1	0071521
108		50x5,0	M12	6,00	133	20	186	17	13	1,07	1	0071527
110		50x5,0	M12	6,00	135	20	188	159	13	1,08	1	0071529
114	4	50x5,0	M12	6,00	139	20	192	163	13	1,11	1	0071530
133		50x5,0	M12	6,00	158	20	212	183	13	1,23	1	0071588
135		50x5,0	M12	6,00	160	20	214	185	13	1,24	1	0071596
140	5	50x5,0	M12	6,00	165	20	219	190	13	1,27	1	0071610
160		50x5,0	M12	6,00	185	20	239	210	13	1,40	1	0071642
165	6	50x5,0	M12	6,00	190	20	244	215	13	1,43	1	0071685
168		50x5,0	M12	6,00	193	20	247	218	13	1,45	1	0071687
194		50x5,0	M12	16,00	219	20	273	244	13	1,61	1	0071758
200		50x5,0	M12	16,00	225	20	279	250	13	1,65	1	0071774
210		50x5,0	M12	16,00	235	20	290	261	13	1,72	1	0071784
219	8	50x5,0	M12	16,00	244	20	299	270	13	1,77	1	0071804
267		50x5,0	M12	16,00	292	20	347	318	13	2,08	1	0071873
273	10	50x5,0	M12	16,00	298	20	353	324	13	2,12	1	0071898
324	12	50x5,0	M12	16,00	349	20	404	375	13	2,44	1	0071939
356		50x5,0	M12	16,00	381	20	436	407	13	2,64	1	0071977
368	14	50x5,0	M12	16,00	393	20	448	419	13	2,72	1	0071979
406*		50x5,0	M12	16,00	431	20	486	457	13	2,96	1	0071993
457*		50x5,0	M12	16,00	492	20	537	508	13	3,29	1	00720091
508*		50x5,0	M12	16,00	533	20	588	559	13	3,61	1	007205082

Connection: Sleeve 1/2" — **without sound insulation lining**

64		50x5,0	M12	6,00	89	20	141	112	13	0,78	1	0072502
76	2 1/2	50x5,0	M12	6,00	101	20	154	125	13	0,86	1	0072507
89	3	50x5,0	M12	6,00	114	20	167	138	13	0,94	1	0072509
108		50x5,0	M12	6,00	133	20	186	17	13	1,06	1	0072514
110		50x5,0	M12	6,00	135	20	188	159	13	1,08	1	0072517
114	4	50x5,0	M12	6,00	139	20	192	163	13	1,10	1	0072519
133		50x5,0	M12	6,00	158	20	212	183	13	1,22	1	0072584
135		50x5,0	M12	6,00	160	20	214	185	13	1,23	1	0072592
140	5	50x5,0	M12	6,00	165	20	219	190	13	1,27	1	0072606

* not certified acc. to RAL-GZ 655-B

Pipe clamp Titan HD, unlined

Dimension [mm]	Dimension [Inch]	Material [mm]	Closure-screw	max. load F_{max} [kN]	H [mm]	A [mm]	B [mm]	S [mm]	D [mm]	Weight [kg/pc.]	Packing [pc.]	Part-No.
Connection: Sleeve 1/2"												**without sound insulation lining**
160		50x5,0	M12	6,00	185	20	239	210	13	1,39	1	0072649
165	6	50x5,0	M12	6,00	190	20	244	215	13	1,43	1	0072681
168		50x5,0	M12	6,00	193	20	247	218	13	1,44	1	0072683
194	7	50x5,0	M12	16,00	219	20	273	244	13	1,61	1	0072754
200		50x5,0	M12	16,00	225	20	279	250	13	1,65	1	0072762
210		50x5,0	M12	16,00	235	20	290	261	13	1,71	1	0072791
219	8	50x5,0	M12	16,00	245	20	299	270	13	1,77	1	0072819
267		50x5,0	M12	16,00	292	20	347	318	13	2,07	1	0072892
273	10	50x5,0	M12	16,00	299	20	353	324	13	2,11	1	0072894
324	12	50x5,0	M12	16,00	349	20	404	375	13	2,44	1	0072955
356		50x5,0	M12	16,00	381	20	436	407	13	2,64	1	0072965
368	14	50x5,0	M12	16,00	393	20	448	419	13	2,72	1	0072967
Connection: Sleeve 1"												**without sound insulation lining**
64		50x5,0	M12	6,00	94	25	141	112	13	0,83	1	0074505
76	$2^{1/2}$	50x5,0	M12	6,00	106	25	154	125	13	0,91	1	0074510
89	3	50x5,0	M12	6,00	119	25	167	138	13	0,99	1	0074512
108		50x5,0	M12	6,00	138	25	186	17	13	1,11	1	0074520
110		50x5,0	M12	6,00	140	25	188	159	13	1,12	1	0074522
114	4	50x5,0	M12	6,00	144	25	192	163	13	1,15	1	0074524
133		50x5,0	M12	6,00	163	25	212	183	13	1,27	1	0074587
135		50x5,0	M12	6,00	165	25	214	185	13	1,28	1	0074595
140	5	50x5,0	M12	6,00	170	25	219	190	13	1,31	1	0074609
160		50x5,0	M12	6,00	190	25	239	210	13	1,44	1	0074641
165	6	50x5,0	M12	6,00	195	25	244	215	13	1,47	1	0074684
168		50x5,0	M12	6,00	198	25	247	218	13	1,49	1	0074686
194	7	50x5,0	M12	16,00	224	25	273	244	13	1,66	1	0074757
200		50x5,0	M12	16,00	230	25	279	250	13	1,70	1	0074773
210		50x5,0	M12	16,00	240	25	290	261	13	1,76	1	0074781
219	8	50x5,0	M12	16,00	250	25	299	270	13	1,82	1	0074803
267		50x5,0	M12	16,00	297	25	347	318	13	2,12	1	0074874
273	10	50x5,0	M12	16,00	304	25	353	324	13	2,16	1	0074897
324	12	50x5,0	M12	16,00	354	25	404	375	13	2,48	1	0074939
356		50x5,0	M12	16,00	386	25	436	407	13	2,69	1	0074968
368	14	50x5,0	M12	16,00	398	25	448	419	13	2,76	1	0074970
406*		50x5,0	M12	16,00	436	25	486	457	13	3,01	1	0074992
457*		50x5,0	M12	16,00	487	25	537	508	13	3,33	1	00749995
508*		50x5,0	M12	16,00	538	25	588	559	13	3,65	1	0075012
Without connection thread												**without sound insulation lining**
406*		50x5,0	without VS	16,00	416	-	486	457	13	2,79	1	0070978
457*		50x5,0	without VS	16,00	467	-	537	508	13	3,11	1	00709887
508*		50x5,0	without VS	16,00	519	-	588	559	13	3,44	1	0070995

***** not certified acc. to RAL-GZ 655-B

Remark: Determination of max. allowable load according to static methods and breaking loads, considering a max. allowable deformation of 1,5 mm or 2% of max. tensible pipe diameter.

Products awarded with „Gütezeichen Rohrbefestigung“ and subject to external supervision acc. to RAL-GZ 655-B.
***** not certified acc. to RAL-GZ 655-B.

Pipe clamp Titan HD, lined

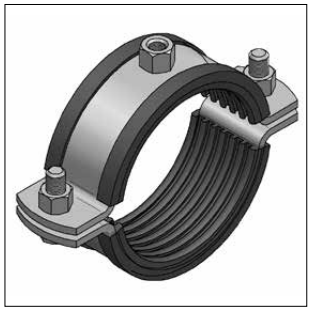

Pipe clamp Titan HD, lined

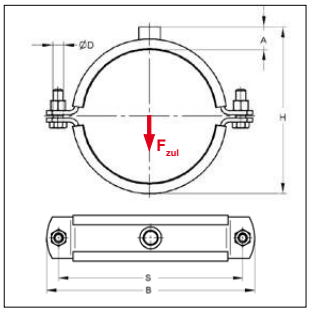

RAL-GZ 655-B

RAL-GZ 656

Related fire loads see chapter 15
MEFA product catalogue „fixing systems“

Delivery time:
5 working days, ex works Kupferzell (pipe clamps Titan HD are special designed on customer‘ request, no exchange or return).
Variant demand on request!

Specification:

Closure:	screwed closure
Construction method:	two-part
OD:	64 up to 508 mm
Connection:	M12, M16, 1/2", 1", 1 1/4"
Sound insulation:	according to DIN 4109

Technical data:

Material:	steel	
Material type:	S235JRG2	
Surface:	galvanized[1)]	
Sound insulation lining:	rubber TPE	Silicone[2)]
Temperature resistance:	- 35 °C up to + 100 °C	- 50 °C up to + 250 °C
Insulation thickness:	6 mm	6 mm

[1)] Components for outdoor application also available with Zinc-Nickel-coating (corrosion-protection class C3 acc. to ISO 9223). Delivery time on demand!
[2)] max. loads are also valid for pipe clamps with silicone lining, these are not RAL approved.

Connection: Thread M16											with sound insulation lining	Silicone	Rubber
Dimension		Material	Closure-screw	max. load F_{zul} [2)]	H	A	B	S	D	Weight	Packing	Part-No.	Part-No.
[mm]	[Inch]	[mm]		[kN]	[mm]	[mm]	[mm]	[mm]	[mm]	[kg/pc.]	[pc.]		
64		50x5,0	M12	3,20	101	26	154	125	13	0,94	1	0076499	0071516
76	2 1/2	50x5,0	M12	3,20	113	26	166	137	13	1,03	1	0076503	0071520
89	3	50x5,0	M12	3,20	126	26	179	150	13	1,13	1	0076505	0071522
108		50x5,0	M12	3,20	145	26	199	170	13	1,27	1	0076511	0071528
110		50x5,0	M12	3,20	147	26	201	172	13	1,28	1	0076538	0071536
114	4	50x5,0	M12	3,20	151	26	205	176	13	1,31	1	0076554	0071552
125		50x5,0	M12	3,20	162	26	216	187	13	1,40	1	0076589	0071587
127		50x5,0	M12	3,20	164	26	218	189	13	1,41	1	0076597	0071595
133		50x5,0	M12	3,20	170	26	224	195	13	1,46	1	0076600	0071609
135		50x5,0	M12	3,20	172	26	226	197	13	1,47	1	0076619	0071617
140	5	50x5,0	M12	3,20	177	26	231	202	13	1,51	1	0076627	0071625
152		50x5,0	M12	3,20	189	26	243	214	13	1,60	1	0076643	0071641
160		50x5,0	M12	3,20	197	26	251	222	13	1,66	1	0076686	0071684
165	6	50x5,0	M12	3,20	202	26	256	227	13	1,70	1	0076694	0071692
168		50x5,0	M12	3,20	205	26	259	230	13	1,72	1	0076716	0071714
177		50x5,0	M12	11,50	214	26	268	239	13	1,79	1	0076732	0071730
180		50x5,0	M12	11,50	217	26	271	242	13	1,81	1	0076759	0071757
194		50x5,0	M12	11,50	231	26	286	257	13	1,91	1	0076775	0071773
200		50x5,0	M12	11,50	237	26	292	263	13	1,96	1	0076783	0071781
210		50x5,0	M12	11,50	247	26	302	273	13	2,03	1	0076805	0071803
219	8	50x5,0	M12	11,50	256	26	309	280	13	2,10	1	0076821	0071838
225		50x5,0	M12	11,50	262	26	317	288	13	2,15	1	0076848	0071846
245		50x5,0	M12	11,50	282	26	336	308	13	2,30	1	0076872	0071870
267		50x5,0	M12	11,50	304	26	359	330	13	2,46	1	0076899	0071897
273	10	50x5,0	M12	11,50	310	26	365	336	13	2,51	1	0076902	0071900
280		50x5,0	M12	11,50	317	26	372	343	13	2,56	1	0076929	0071927
298		50x5,0	M12	11,50	335	26	390	361	13	2,69	1	0076937	0071935
324	12	50x5,0	M12	11,50	361	26	416	387	13	2,89	1	0076945	0071943
356		50x5,0	M12	11,50	393	26	448	419	13	3,13	1	0076961	0071978
368		50x5,0	M12	11,50	405	26	460	431	13	3,22	1	0076988	0071986
406*		50x5,0	M12	11,50	443	26	498	469	13	3,50	1	0076997	0071994
457*		50x5,0	M12	11,50	494	26	549	520	13	3,89	1	0077001	0072003
508*		50x5,0	M12	11,50	545	26	600	571	13	4,27	1	0077005	0072014

* not certified acc. to RAL-GZ 655-B

Pipe clamp Titan HD, lined

Connection: Sleeve 1/2"											with sound insulation lining	Silicone	Rubber
Dimension		Material	Closure-screw	max. load F_{max} 2)	H	A	B	S	D	Weight	Packing	Part-No.	Part-No.
[mm]	[Inch]	[mm]		[kN]	[mm]	[mm]	[mm]	[mm]	[mm]	[kg/pc.]	[pc.]		
64		50x5,0	M12	3,20	101	26	154	125	13	0,94	1	0077506	0072503
76	$2^{1/2}$	50x5,0	M12	3,20	113	26	166	137	13	1,03	1	0077510	0072508
89	3	50x5,0	M12	3,20	126	26	179	150	13	1,12	1	0077512	0072510
108		50x5,0	M12	3,20	145	26	199	170	13	1,27	1	0077518	0072516
110		50x5,0	M12	3,20	147	26	201	172	13	1,28	1	0077534	0072532
114	4	50x5,0	M12	3,20	151	26	205	176	13	1,31	1	0077550	0072559
125		50x5,0	M12	3,20	162	26	216	187	13	1,39	1	0077585	0072583
127		50x5,0	M12	3,20	164	26	218	189	13	1,41	1	0077593	0072591
133		50x5,0	M12	3,20	170	26	224	195	13	1,45	1	0077607	0072605
135		50x5,0	M12	3,20	172	26	226	197	13	1,47	1	0077615	0072613
140	5	50x5,0	M12	3,20	177	26	231	202	13	1,51	1	0077623	0072621
152		50x5,0	M12	3,20	189	26	243	214	13	1,60	1	0077631	0072648
160		50x5,0	M12	3,20	197	26	251	222	13	1,66	1	0077682	0072680
165	6	50x5,0	M12	3,20	202	26	256	227	13	1,69	1	0077690	0072699
168		50x5,0	M12	3,20	205	26	259	230	13	1,72	1	0077712	0072710
177		50x5,0	M12	11,50	214	26	268	239	13	1,78	1	0077739	0072737
180		50x5,0	M12	11,50	217	26	271	242	13	1,81	1	0077755	0072753
194		50x5,0	M12	11,50	231	26	286	257	13	1,91	1	0077771	0072761
200		50x5,0	M12	11,50	237	26	292	263	13	1,96	1	0077798	0072788
210		50x5,0	M12	11,50	247	26	302	273	13	2,03	1	0077801	0072818
219	8	50x5,0	M12	11,50	257	26	309	280	13	2,10	1	0077828	0072826
225		50x5,0	M12	11,50	262	26	317	288	13	2,14	1	0077844	0072842
245		50x5,0	M12	11,50	282	26	336	308	13	2,29	1	0077879	0072877
267		50x5,0	M12	11,50	304	26	359	330	13	2,46	1	0077895	0072893
273	10	50x5,0	M12	11,50	311	26	365	336	13	2,50	1	0077909	0072907
280		50x5,0	M12	11,50	317	26	372	343	13	2,56	1	0077925	0072923
298		50x5,0	M12	11,50	335	26	390	361	13	2,69	1	0077933	0072931
324	12	50x5,0	M12	11,50	361	26	416	387	13	2,88	1	0077941	0072958
356		50x5,0	M12	11,50	393	26	448	419	13	3,12	1	0077968	0072966
368		50x5,0	M12	11,50	405	26	460	431	13	3,21	1	0077984	0072982

Connection: Sleeve 1"											with sound insulation lining	Silicone	Rubber
64		50x5,0	M12	3,20	106	31	154	125	13	0,98	1	0079498	0074507
76	$2^{1/2}$	50x5,0	M12	3,20	118	31	166	137	13	1,07	1	0079502	0074511
89	3	50x5,0	M12	3,20	131	31	179	150	13	1,17	1	0079504	0074513
108		50x5,0	M12	3,20	150	31	199	170	13	1,31	1	0079510	0074519
110		50x5,0	M12	3,20	152	31	201	172	13	1,33	1	0079537	0074535
114	4	50x5,0	M12	3,20	156	31	205	176	13	1,36	1	0079553	0074551
125		50x5,0	M12	3,20	167	31	216	187	13	1,44	1	0079588	0074586
127		50x5,0	M12	3,20	169	31	218	189	13	1,46	1	0079596	0074594
133		50x5,0	M12	3,20	175	31	224	195	13	1,50	1	0079618	0074608
135		50x5,0	M12	3,20	177	31	226	197	13	1,52	1	0079626	0074616
140	5	50x5,0	M12	3,20	182	31	231	202	13	1,55	1	0079634	0074624
152		50x5,0	M12	3,20	194	31	243	214	13	1,64	1	0079642	0074640
160		50x5,0	M12	3,20	202	31	251	222	13	1,70	1	0079685	0074683

Pipe clamp Titan HD, lined

Connection: Sleeve 1"											with sound insulation lining	Silicone	Rubber
Dimension		Material	Closure-	max. load F_{max} 2)	H	A	B	S	D	Weight	Packing	Part-No.	Part-No.
[mm]	[Inch]	[mm]	screw	[kN]	[mm]	[mm]	[mm]	[mm]	[mm]	[kg/pc.]	[pc.]		
165	6	50x5,0	M12	3,20	207	31	256	227	13	1,74	1	0079693	0074691
168		50x5,0	M12	3,20	210	31	259	230	13	1,76	1	0079715	0074713
177		50x5,0	M12	11,50	219	31	268	239	13	1,83	1	0079731	0074748
180		50x5,0	M12	11,50	222	31	271	242	13	1,85	1	0079758	0074756
194		50x5,0	M12	11,50	236	31	286	257	13	1,96	1	0079774	0074772
200		50x5,0	M12	11,50	242	31	292	263	13	2,00	1	0079782	0074780
210		50x5,0	M12	11,50	252	31	302	273	13	2,08	1	0079804	0074802
219	8	50x5,0	M12	11,50	262	31	309	280	13	2,15	1	0079820	0074829
225		50x5,0	M12	11,50	267	31	317	288	13	2,19	1	0079847	0074845
245		50x5,0	M12	11,50	287	31	336	308	13	2,34	1	0079871	0074861
267		50x5,0	M12	11,50	309	31	359	330	13	2,51	1	0079898	0074896
273	10	50x5,0	M12	11,50	316	31	365	336	13	2,55	1	0079901	0074918
280		50x5,0	M12	11,50	322	31	372	343	13	2,60	1	0079928	0074926
298		50x5,0	M12	11,50	340	31	390	361	13	2,74	1	0079936	0074934
324	12	50x5,0	M12	11,50	366	31	416	387	13	2,93	1	0079944	0074942
356		50x5,0	M12	11,50	398	31	448	419	13	3,17	1	0079960	0074969
368		50x5,0	M12	11,50	410	31	460	431	13	3,26	1	0079987	0074985
406*		50x5,0	M12	11,50	448	31	498	469	13	3,55	1	00799895	0074993
457*		50x5,0	M12	11,50	499	31	549	520	13	3,93	1	00799903	0075003
508*		50x5,0	M12	11,50	550	31	600	571	13	4,31	1	00799907	0075013
Without connection thread											with sound insulation lining	Silicone	Rubber
406*		50x5,0	without VS	11,50	428	-	498	469	13	3,33	1	0075990	0070979
457*		50x5,0	without VS	11,50	479	-	549	520	13	3,71	1	0075998	0070989
508*		50x5,0	without VS	11,50	530	-	600	571	13	4,09	1	0076009	0070996

***** not certified acc. to RAL-GZ 655-B

Remark: Determination of max. allowable load according to static methods and breaking loads, considering a max. allowable deformation of 1,5 mm or 2% of max. tensible pipe diameter.

Products awarded with „Gütezeichen Rohrbefestigung“ and subject to external supervision acc. to RAL-GZ 655-B.
***** not certified acc. to RAL-GZ 655-B.

Pipe clamp Form A, type Maxima / Titan HD, unlined

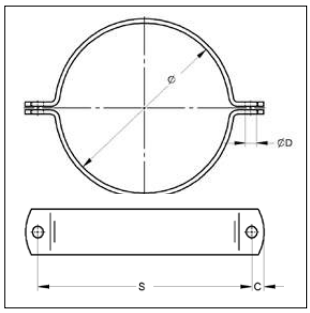

Pipe clamp shape A
type Maxima / Titan HD

Specification:

Closure:	nut / closure-screw
Construction method:	two-part
OD:	20 up to 368 mm
Connection:	without connection
Delivery time:	on request

Technical data:

Material:	steel
Material type:	S235JR
Surface:	galvanized

OD [mm]	Material [mm]	accessory: screw	ØD [mm]	S [mm]	C [mm]	Weight [kg/pc.]	Packing [pc.]	Part-No. galvanized
20 - 23	25 x 3	M8	10,5	43	6,5	0,06	1	0068902
25 - 28	25 x 3	M8	10,5	48	6,5	0,07	1	0068903
32 - 35	25 x 3	M8	10,5	68	12	0,18	1	0068905
36 - 40	25 x 3	M8	10,5	72	12	0,18	1	0068907
41 - 46	25 x 3	M8	10,5	80	12	0,20	1	0068909
48 - 55	25 x 3	M8	10,5	88	12	0,21	1	0068911
57 - 61	25 x 3	M8	10,5	96	12	0,23	1	0068913
63 - 67	25 x 3	M8	10,5	102	12	0,24	1	0068889
70 - 76	25 x 3	M10	10,5	104	12	0,27	1	00890608
84 - 92	30 x 3	M10	10,5	124	12	0,29	1	0089088
96 - 102	30 x 3	M10	10,5	136	12	0,38	1	0089096
108	50 x 5	M12	13,0	148	17	0,89	1	0070512
110	50 x 5	M12	13,0	150	17	0,91	1	0070515
114	50 x 5	M12	13,0	154	17	0,93	1	0070514
133	50 x 5	M12	13,0	173	17	1,05	1	0070581
135	50 x 5	M12	13,0	175	17	1,06	1	0070600
140	50 x 5	M12	13,0	180	17	1,10	1	0070603
159	50 x 5	M12	13,0	200	17	1,22	1	0070647
165	50 x 5	M12	13,0	205	17	1,26	1	0070686
168	50 x 5	M12	13,0	208	17	1,27	1	0070689
194	50 x 5	M12	13,0	234	17	1,44	1	0070751
200	50 x 5	M12	13,0	240	17	1,48	1	0070778
210	50 x 5	M12	13,0	250	17	1,54	1	0070786
219	50 x 5	M12	13,0	260	17	1,60	1	0070808
267	50 x 5	M12	13,0	307	17	1,90	1	0070881
273	50 x 5	M12	13,0	314	17	1,94	1	0070891
324	50 x 5	M12	13,0	364	17	2,27	1	0070945
356	50 x 5	M12	13,0	396	17	2,47	1	0070962
368	50 x 5	M12	13,0	408	17	2,55	1	0070964

Pipe clamp Form A, type Maxima / Titan HD, lined

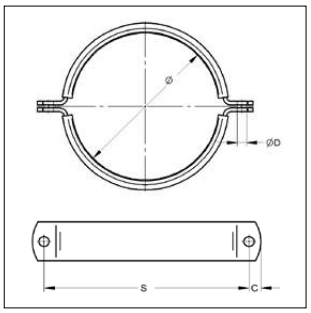

SCHALL-SCHUTZ DIN 4109

Baustoffklasse B2 "Normal entflammbar" nach DIN 4102

Rohrschelle Form A
Typ Maxima / Titan HD

Specification:

Closure:	nut / closure-screw
Construction method:	two-part
OD:	22 up to 368 mm
Connection:	without connection
Sound insulation:	for DIN 4109
Delivery time:	on request

Technical data:

Material:	steel
Material type:	S235JR
Surface:	galvanized
Material	
Sound insulation lining:	EPDM lining
Temperature resistance:	- 35 °C up to + 100 °C
Insulation thickness:	6 mm

OD [mm]	Material [mm]	accessory: screw	ØD [mm]	S [mm]	C [mm]	Weight [kg/pc.]	Packing [pc.]	Part-No. EPDM
22 - 25	25 x 3	M8	10,5	68	12	0,12	1	0068867
26 - 30	25 x 3	M8	10,5	72	12	0,13	1	0068865
31 - 36	25 x 3	M8	10,5	80	12	0,14	1	0068872
38 - 45	25 x 3	M8	10,5	88	12	0,30	1	0068874
47 - 51	25 x 3	M8	10,5	96	12	0,32	1	0068876
53 - 57	25 x 3	M8	10,5	102	12	0,34	1	0068888
58 - 64	25 x 3	M8	10,5	104	12	0,39	1	00688885
65 - 70	25 x 3	M8	10,5	112	12	0,41	1	0089078
72 - 80	30 x 3	M10	10,5	124	12	0,30	1	0089087
84 - 92	30 x 3	M10	10,5	136	12	0,48	1	0089095
93 - 100	30 x 3	M10	10,5	141	12	0,39	1	0089109
102 - 106	30 x 3	M10	10,5	151	12	0,53	1	0089125
108	50 x 5	M12	13,0	160	17	1,10	1	0070513
110	50 x 5	M12	13,0	162	17	1,11	1	0070548
114	50 x 5	M12	13,0	166	17	1,14	1	0070556
133	50 x 5	M12	13,0	185	17	1,28	1	0070602
135	50 x 5	M12	13,0	187	17	1,30	1	0070610
140	50 x 5	M12	13,0	192	17	1,34	1	0070629
159	50 x 5	M12	13,0	212	17	1,48	1	0070649
165	50 x 5	M12	13,0	217	17	1,52	1	0070696
168	50 x 5	M12	13,0	220	17	1,55	1	0070718
194	50 x 5	M12	13,0	246	17	1,74	1	0070777
200	50 x 5	M12	13,0	252	17	1,79	1	0070785
210	50 x 5	M12	13,0	262	17	1,86	1	0070807
219	50 x 5	M12	13,0	272	17	1,93	1	0070823
267	50 x 5	M12	13,0	319	17	2,29	1	0070890
273	50 x 5	M12	13,0	326	17	2,33	1	0070904
324	50 x 5	M12	13,0	376	17	2,71	1	0070947
356	50 x 5	M12	13,0	408	17	2,95	1	0070963
368	50 x 5	M12	13,0	420	17	3,04	1	0070971

Pipe clamp Form A, type TGA, unlined

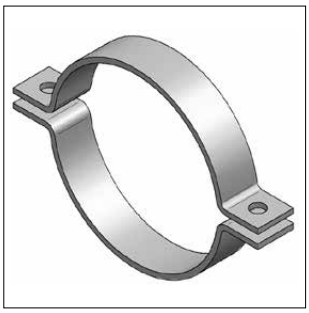

Pipe clamp Form A, type TGA

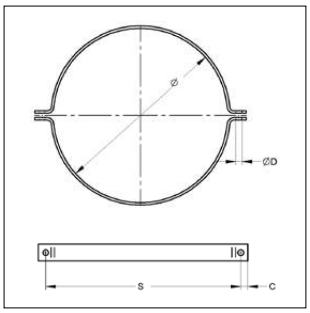

Select surface
R raw
G galvanized
F hot-dip galvanized
108 b □ b 0219

Specification:

Closure:	nut / closure-screw
Construction method:	two-part
OD:	219 up to 1220 mm
Connection:	without connection
Delivery time:	on request

Technical data:

Material:	steel
Material type:	S235JR
Surface:	raw, galvanized hot-dip galvanized

OD [mm]	Material [mm]	accessory: screw	ØD [mm]	S [mm]	C [mm]	Weight [kg/pc.]	Packing [pc.]	Part-No.
219	60 x 6	M16	17	288	24	2,42	1	109 f a a 0219
267	60 x 6	M16	17	337	24	2,85	1	109 f a a 0267
273	60 x 6	M16	17	343	24	2,90	1	109 f a a 0273
324	60 x 6	M16	17	395	24	3,36	1	109 f a a 0324
356	60 x 8	M16	17	430	24	4,86	1	109 g a a 0356
368	60 x 8	M16	17	442	24	5,01	1	109 g a a 0368
406	60 x 8	M16	17	481	24	5,46	1	109 g a a 0406
419	60 x 8	M16	17	494	24	5,61	1	109 g a a 0419
457	60 x 8	M16	17	532	24	6,06	1	109 g a a 0457
508	70 x 10	M20	23	598	30	9,87	1	109 h a a 0508
521	70 x 10	M20	23	611	30	10,10	1	109 h a a 0521
610	70 x 10	M20	23	700	30	11,63	1	109 h a a 0610
711	70 x 10	M20	23	802	30	13,38	1	109 h a a 0711
813	70 x 10	M20	23	904	30	15,14	1	109 h a a 0813
914	90 x 15	M24	27	1034	36	33,29	1	109 k a a 0914
1016	90 x 15	M24	27	1137	36	36,69	1	109 k a a 1016
1220	90 x 15	M24	27	1341	36	43,48	1	109 k a a 1220

R raw
G galvanized
F hot-dip galvanized

Pipe clamp Form A, type TGA, lined

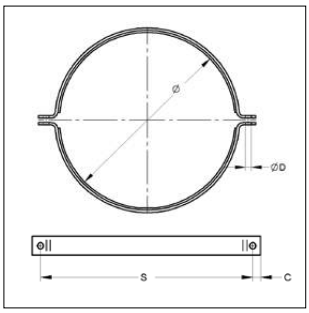

SCHALL-SCHUTZ DIN 4109

Baustoffklasse B2 "Normal entflammbar" nach DIN 4102

Pipe clamp Form A, type TGA

Specification:

Closure:	nut / closure-screw
Construction method:	two-part
OD:	219 up to 1220 mm
Connection:	without connection
Sound insulation:	for DIN 4109
Delivery time:	on request

Technical data:

Material:	steel
Material type:	S235JR
Surface:	galvanized
Sound insulation lining:	EPDM lining
Temperature resistance:	- 35 °C up to + 100 °C
Insulation thickness:	6 mm

OD [mm]	Material [mm]	accessory: screw	ØD [mm]	S [mm]	C [mm]	Weight [kg/pc.]	Packing [pc.]	Part-No.
219	60 x 6	M16	17	304	24	2,91	**1**	109 g f b a 0219
267	60 x 6	M16	17	353	24	3,43	**1**	109 g f b a 0267
273	60 x 6	M16	17	359	24	3,49	**1**	109 g f b a 0273
324	60 x 6	M16	17	411	24	4,03	**1**	109 g f b a 0324
356	60 x 8	M16	17	446	24	5,64	**1**	109 g g b a 0356
368	60 x 8	M16	17	458	24	5,80	**1**	109 g g b a 0368
406	60 x 8	M16	17	497	24	6,33	**1**	109 g g b a 0406
419	60 x 8	M16	17	510	24	6,50	**1**	109 g g b a 0419
457	60 x 8	M16	17	548	24	7,02	**1**	109 g g b a 0457
508	70 x 10	M20	23	614	30	10,13	**1**	109 g h b a 0508
521	70 x 10	M20	23	627	30	11,38	**1**	109 g h b a 0521
610	70 x 10	M20	23	716	30	13,09	**1**	109 g h b a 0610
711	70 x 10	M20	23	818	30	15,05	**1**	109 g h b a 0711
813	70 x 10	M20	23	920	30	17,02	**1**	109 g h b a 0813
914	90 x 15	M24	27	1050	36	36,13	**1**	109 g k b a 0914
1016	90 x 15	M24	27	1153	36	39,80	**1**	109 g k b a 1016
1220	90 x 15	M24	27	1357	36	47,13	**1**	109 g k b a 1220

Pipe clamp Form A, DIN 3567, unlined

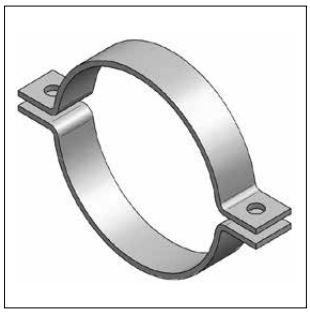

Pipe clamp Form A, DIN 3567

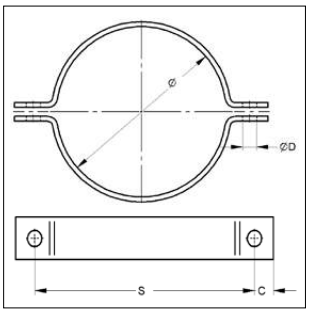

Select surface
R raw
G galvanized
F hot-dip galvanized
108 b b 0219

Specification:

Closure:	nut / closure-screw
Construction method:	two-part
OD:	25 up to 521 mm
Connection:	without connection
Delivery time:	on request

Technical data:

Material:	steel
Material type:	S235JR
Surface:	raw, galvanized hot-dip galvanized

OD [mm]	Material [mm]	accessory: screw	ØD [mm]	S [mm]	C [mm]	Weight [kg/pc.]	Packing [pc.]	Part-No.
25	30 x 5	M10	11,5	62	15	0,22	1	107 A D 0025
27	30 x 5	M10	11,5	66	15	0,23	1	107 A D 0027
30	30 x 5	M10	11,5	68	15	0,24	1	107 A D 0030
34	30 x 5	M10	11,5	72	15	0,25	1	107 A D 0034
43	30 x 5	M10	11,5	82	15	0,28	1	107 A D 0043
49	30 x 5	M10	11,5	88	15	0,31	1	107 A D 0049
57	40 x 6	M12	14,0	104	18	0,57	1	107 A F 0057
61	40 x 6	M12	14,0	108	18	0,59	1	107 A F 0061
77	40 x 6	M12	14,0	122	18	0,67	1	107 A F 0077
89	40 x 6	M12	14,0	136	18	0,76	1	107 A F 0089
108	50 x 8	M16	18,0	172	24	1,60	1	107 A H 0108
115	50 x 8	M16	18,0	178	24	1,64	1	107 A H 0115
133	50 x 8	M16	18,0	196	24	1,79	1	107 A H 0133
140	50 x 8	M16	18,0	204	24	1,84	1	107 A H 0140
159	50 x 8	M16	18,0	222	24	2,00	1	107 A H 0159
169	50 x 8	M16	18,0	232	24	2,09	1	107 A H 0169
194	50 x 8	M16	18,0	258	24	2,42	1	107 A H 0194
220	50 x 8	M16	18,0	284	24	2,65	1	107 A H 0220
267	60 x 8	M20	23,0	342	30	3,85	1	107 A I 0267
273	60 x 8	M20	23,0	348	30	3,91	1	107 A I 0273
324	60 x 8	M20	23,0	398	30	4,49	1	107 A I 0324
356	60 x 8	M20	23,0	432	30	5,09	1	107 A I 0356
368	60 x 8	M20	23,0	444	30	5,30	1	107 A I 0368
407	70 x 10	M24	27,0	498	36	8,53	1	107 A K 0407
457	70 x 10	M24	27,0	550	36	9,56	1	107 A K 0457
508	70 x 10	M24	27,0	600	36	10,20	1	107 A K 0508

R raw
G galvanized
F hot-dip galvanized

Glass fiber lining

Glass fiber lining

Specification:

Application area: Glass fiber lining for thermal separation, sound-decoupling and prevention of contact corrosion

Attributes: self-adhesive

Technical data:

Material: glass filament yarn

Thickness: 5 mm

Temperature - resistance: up to 450° C (Glue as a mounting aid up to 100° C.)

Remark: For high temperature pipes eventually consider a reduction of bearing loads acc. DIN EN 1993 and DIN EN 13480-3

Info: fiber glass tapes for pipe clamps available in requested length and attached lose

Identification	Dimension [mm]	Weight [kg/m]	Packing [m]	Part.-No.
Glass fiber lining, self-adhesive	**25x5**	0,068	25	723022505
Glass fiber lining, self-adhesive	**30x5**	0,081	25	723023005
Glass fiber lining, self-adhesive	**35x5**	0,098	25	723023505
Glass fiber lining, self-adhesive	**50x5**	0,135	25	723025005

Locking lip adaptor

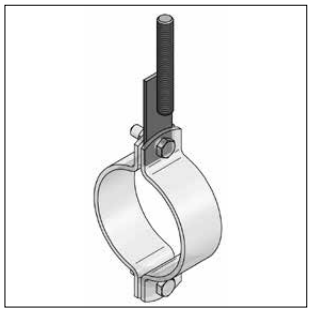

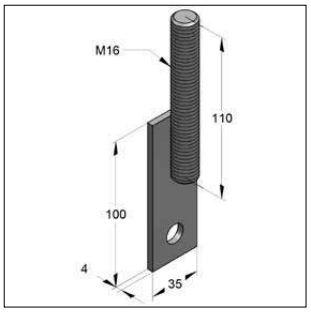

Locking lip adaptor

Specification:

Application area: M16 connection for Titan HD and DIN Pipe clamps

Required accessory: M16 threaded coupling for continued threaded rods
required screw coupling:
hexagon screw M12x30
nut M12

Technical data:

Material: steel

Material type: S235JR

Surface: galvanized

Safety factor: 1,54

Identification	Hole-Ø [mm]	male thread	max. tensil load [kN]	Weight [kg/pc.]	Packing [pc.]	Part.-No.
Locking lip adaptor	**13**	M16	5,0	0,279	1	9993284

Mounting unit / Hanger chain

Hanger chain on
CENTUM® profile

Hanger chain on
system 45

2-hole Connecting plate for hanger chain

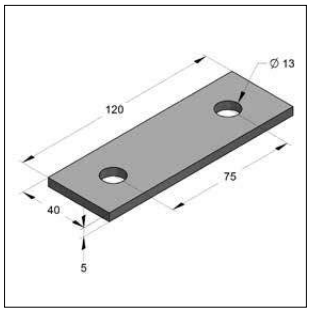

Connecting plate
mounting unit / hanger chain

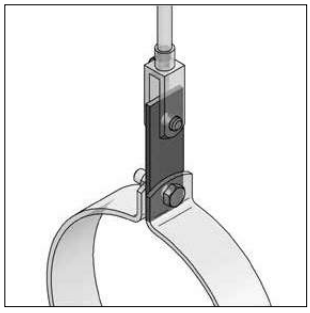

Connecting plate with
Titan HD and U-head
page Seite 1/18

Specification:

Application area:	for connection of Titan HD-pipe clamps with U-head on mounting unit / hanger chain
Remark:	connection plates for higher strains or for M16 connector on request

Technical data:

Material:	steel
Material type:	S235JR
Surface:	galvanized
Safety factor:	1,54

Identification	Dimension plate length x width x strength [mm]	Hole [mm]	max. tensil load Zug [kN]	Weight [kg/pc.]	Packing [pc.]	Part.-No.
Connecting plate	120 x 40 x 5,0	13,0	12,5	0,187	1	1660001413

ⓘ suitable locking screws and nuts see on page 4/11

Stirrup clamp according to DIN 1593

Stirrup clamp according to DIN 1593

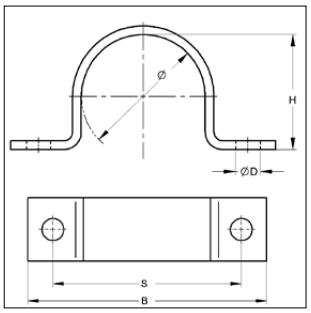

Select surface
R raw
G galvanized
F hot-dip galvanized
108 b ☐ b 0219

Specification:

Closure:	one-piece
OD:	20 up to 219 mm
Connection:	without connection
Delivery time:	on request

Technical data:

Material:	steel
Material type:	S235JR
Surface:	galvanized hot-dip galvanized

* similar to DIN 1593

OD [mm]	Material [mm]	Ø [mm]	B [mm]	S [mm]	ØD [mm]	H [mm]	Weight [kg/pc.]	Packing [pc.]	Part-No.
20 - 23	25 x 3	23,0	82	56	11	19	0,060	1	106 f b 0023
23 - 26	25 x 3	26,0	84	58	11	22	0,064	1	106 f b 0026
26 - 29	25 x 3	28,5	90	64	11	24	0,069	1	106 f b 0029
29 - 31	25 x 3	31,0	90	64	11	27	0,072	1	106 f b 0031
33 - 36	30 x 5	36,0	106	80	11	32	0,173	1	106 f d 0036
36 - 39	30 x 5	39,0	110	84	11	34	0,181	1	106 f d 0039
39 - 43	30 x 5	43,0	120	88	14	38	0,195	1	106 f d 0043
43 - 46	30 x 5	46,0	122	90	14	41	0,203	1	106 f d 0046
46 - 49	30 x 5	49,0	122	90	14	44	0,208	1	106 f d 0049
53 - 58	40 x 5	58,0	142	110	14	52	0,335	1	106 f n 0058
58 - 61	40 x 5	61,0	142	110	14	57	0,347	1	106 f n 0061
67 - 71	40 x 5	71,0	152	120	14	66	0,386	1	106 f n 0071
73 - 77	40 x 5	77,0	176	136	18	72	0,422	1	106 f n 0077
77 - 81	40 x 5	81,0	184	144	18	76	0,446	1	106 f n 0081
86 - 91	40 x 8	91,0	198	158	18	85	0,795	1	106 f o 0091
99 - 103	40 x 8	103,0	214	174	18	98	0,892	1	106 f o 0103
105 - 109	40 x 8	109,0	220	180	18	104	0,931	1	106 f o 0109
110 - 115	40 x 8	115,0	226	186	18	109	0,968	1	106 f o 0115
133 *	50 x 8	133,0	262	214	18	128	1,270	1	106 f h 0133
140 *	50 x 8	140,0	270	222	18	135	1,320	1	106 f h 0140
159 *	50 x 8	159,0	288	240	18	154	1,500	1	106 f h 0159
168 *	50 x 8	169,0	298	250	18	161	1,687	1	106 f h 0168
194 *	50 x 8	194,0	326	278	18	189	1,800	1	106 f h 0194
219 *	50 x 8	220,0	356	308	18	215	2,135	1	106 f h 0219

R raw
G galvanized
F hot-dip galvanized

U-bolt

U-bolt

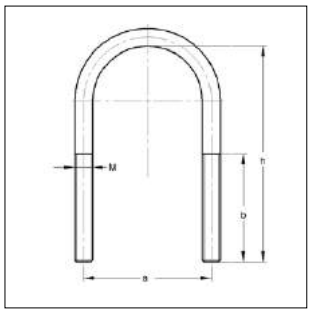

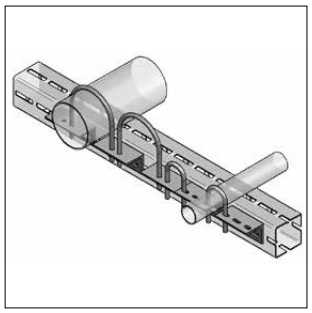

Pipe holder

pageSeite 1/25

Specification:

OD	60 up to 324 mm
Connection:	M8, M10, M12, M20
Delivery time:	on request

Technical data:

Material:	steel
Material type:	S235JR
Surface:	zinc-nickel

U-bolt galvanized see MEFA product catalogue „fixing systems“ chapter 1

U-bolt differing from DIN 3570 — **without nuts**

OD [mm]	[Inch]	for max. profile height [mm]	Thread M	overall height h [mm]	center distance a [mm]	length of thread b [mm]	Weight [kg/pc.]	Packing [pc.]	Part-No.
60,3	2	40	M10	120	71	70	0,141	1	0507060/zn
76,1	2 1/2	40	M10	135	87	70	0,161	1	0507076/zn
88,9	3	40	M10	150	100	70	0,179	1	0507089/zn
108,0		60	M12	190	121	90	0,325	1	0507108/zn
114,3	4	60	M12	195	126	90	0,334	1	0507114/zn
133,0		60	M12	215	146	90	0,370	1	0507133/zn
139,7	5	60	M12	220	152	90	0,379	1	0507140/zn
159,0		60	M12	240	172	90	0,416	1	0507159/zn
168,3	6	60	M12	250	180	90	0,433	1	0507168/zn
219,1	8	60	M12	300	233	95	0,525	1	0507219/zn

U-bolt without nuts according to DIN 3570

273,0	10	20	M20	313	302	70	1,631	1	0507273/zn
323,9	12	20	M20	364	352	70	1,892	1	0507324/zn

Accessory

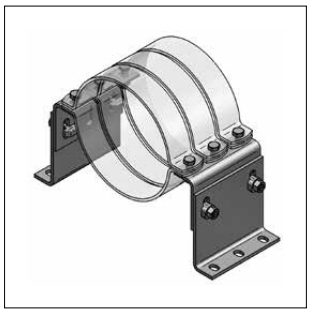

Fixpoint bracket HV
Page 4/2

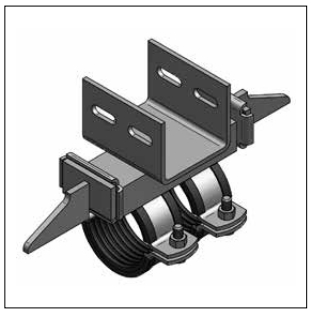

Fixpoint with CENTUM®
Massive connector
Page 4/3

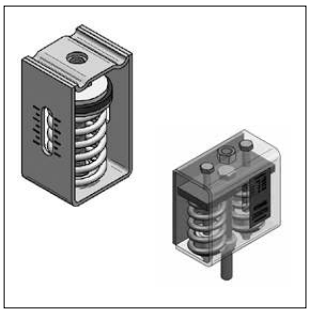

Spring insulator FH1 / FH2
Page 4/5

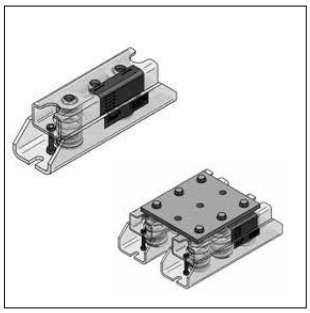

Spring bearing FL / FLD
Page 4/6

Base plates, Threaded coupling
Page 4/10

Threaded rods, Distance tube
Page 4/11

Hexagon nut, Hexagon screw
Page 4/12

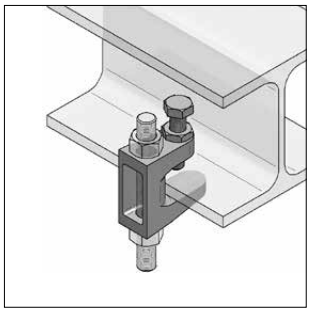

Washer, Girder clamps
Page 4/13

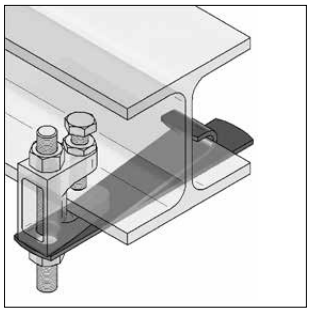

Safety lug
Page 4/14

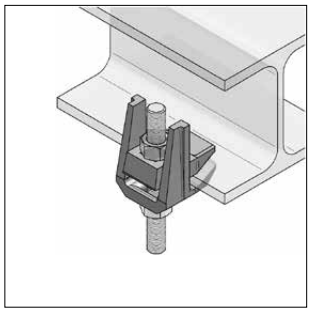

Girder clamp F3 / F9
Page 4/15

Bolt anchor BZ plus,
Bolt anchor BZ plus 4A
Page 4/16

Injection system VMZ,
Injection system VMZ A4
Page 4/19

Fixpoint bracket HV

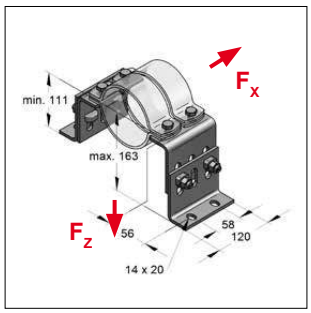

Fixpoint bracket HV1

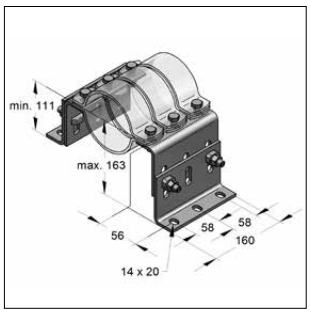

Fixpoint bracket HV2

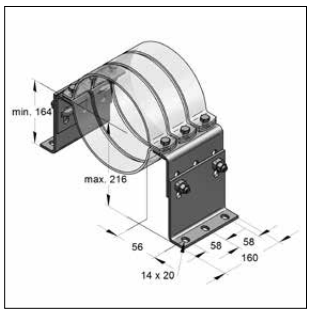

Fixpoint bracket HV3

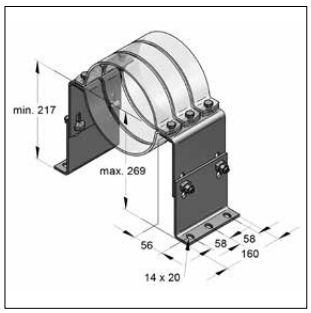

Fixpoint bracket HV4

Specification:

Application area: Height adjustable bracket for fixation of pipes without sound insulation. To use as fixpoint in conjunction with MEFA Titan HD clamps. Also applicable as height adjustable substructure of rail constructions.

Remark: High-strength bolting through CENTUM-T-lock head connection can be fixed on any substructure (C-profile rail, CENTUM, steel girder)

Scope of delivery:
2 x angle (stilt)
2 x angle (side part)
4 x T-lock head M12x40
4 or 6 x hexagon screw M12x40 + nut M12

Technical data:

Material	steel
Material type:	S235JR
Surface	
- angle:	hot-dip galvanized
- screw joint:	Zinc-Nickle
Safety factor:	1,54
Tightening torque	
- pipe clamp:	60 Nm
- T-lock head:	120 Nm

(* OD < 168 mm = 18 kN, OD > 168 mm = 40 kN (limited by T-lock head connection)

Type	Length L	Axis height min.-max.	Number of fixpoint clamps	Reco-mmended pipe OD	Angle stilt	Angle side part	max. load F_x	max. load F_z	Weight	Packing	Part-No.
	[mm]	[mm]	[pcs.]	[mm]	[pair]	[pair]	[kN]	[kN]	[kg/pc.]	[pcs.]	
HV1	120	111-163	2	64-273	120/6/100	120/6/100	20	12	3,58	1	00200405/fvz
HV2	160	111-163	3	64-273	160/6/100	160/6/100	30	18/40*	4,74	1	00200406/fvz
HV3	160	164-216	3	64-406	160/6/153	160/6/100	30	18/40*	5,69	1	00200407/fvz
HV4	160	217-269	3	64-508	160/6/153	160/6/153	30	18/40*	6,52	1	00200408/fvz

Suitable Titan HD clamps 50/5 without connection thread must be ordered separately

Fixpoint type A with CENTUM® XL100 massive connector

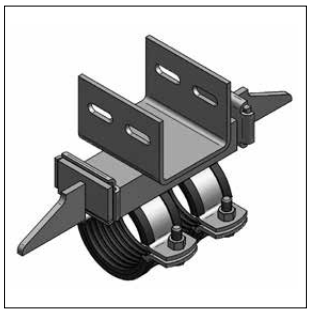

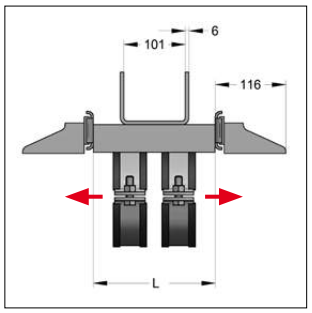

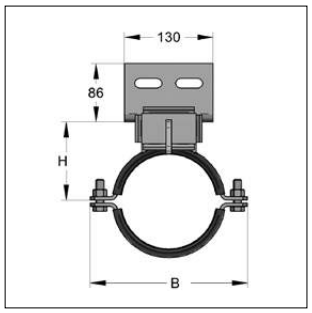

SCHALL-SCHUTZ DIN 4109

Baustoffklasse ●B2● "Normal entflammbar" nach DIN 4102

Fixpoint type A with CENTUM®
massive connector

Specification:

Application:	established MEFA fixpoint for high power transmission while sound insulation. Due to welded Massive connector it´s possible to mount this fixpoint directly at CENTUM square profile.
Sound insulation:	according to DIN 4109
Accessory:	T-lock head, toothed, M12x40

Technical data:

Material:	Steel	
Material type:	S235JR	
Surface:	galvanized	
Pressure piece:	raw (welding on pipe on site)	
Sound insulation lining:	TPE/EPDM lining	Silicon (on request)
Temperature resistance:	- 35 °C up to + 100 °C	- 50°C up to +250°C
On request:	Massive connector vertical/horizontal, XL120, XL 80	

[1)] Bearing pressure or reactive force depends on weld seam on site (min. 3 mm fillet weld right / left) and CENTUM construction too. The quality of weld seam has to be proofed.

Fixpoint type A — **TPE/EPDM**

Clamping-range [mm]	Material pipe clamp [mm]	Sectional steel [mm] x [mm] x L [mm]	H [mm]	B [mm]	max. axiale[1)] reactive force [kN]	Weight [kg/pc.]	Packing [pcs.]	Part-No.
60,3	50 x 5	65 x 42 x 200	72	148	20	6,12	1	9993633
76,1	50 x 5	65 x 42 x 200	82	166	20	6,36	1	9993732
88,9	50 x 5	65 x 42 x 200	90	179	20	6,55	1	9994027
114,3	50 x 5	65 x 42 x 200	104	205	20	6,93	1	9993256
139,7	50 x 5	80 x 45 x 200	118	231	20	7,69	1	9993733
168,3	50 x 5	120 x 55 x 330	132	258	20	11,75	1	9993734
219,1	50 x 5	120 x 55 x 330	161	309	20	12,51	1	9992830
273 - 274	50 x 5	120 x 55 x 330	192	363	20	13,32	1	9992178

Fixpoint type B with CENTUM® XL100 massive connector

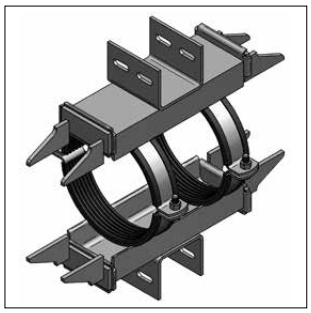

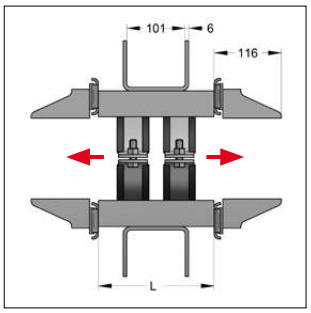

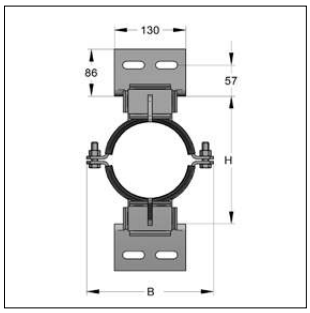

SCHALL-SCHUTZ DIN 4109

Baustoffklasse ●B2● "Normal entflammbar" nach DIN 4102

Fixpoint type B with CENTUM® massive connector

04

Specification:

Application: established MEFA fixpoint for high power transmission while sound insulation. Due to welded Massive connector it´s possible to mount this fixpoint directly at CENTUM square profile.

Sound insulation: according to DIN 4109

Accessory: T-lock head, toothed, M12x40

Technical data:

Material: Steel

Material type: S235JR

Surface: galvanized

Pressure piece: raw (welding on pipe on site)

Sound insulation lining: TPE/EPDM lining Silicon (on request)

Temperature resistance: - 35 °C up to + 100 °C - 50°C up to +250°C

On request: Massive connector vertical/horizontal, XL120, XL 80

[1] Bearing pressure or reactive force depends on weld seam on site (min. 3 mm fillet weld right / left) and CENTUM construction too. The quality of weld seam has to be proofed.

Fixpoint type B — **TPE/EPDM**

Clamping-range [mm]	Material pipe clamp [mm]	Sectional steel [mm] x [mm] x L [mm]	H [mm]	B [mm]	max. axiale reactive force[1] [kN]	Weight [kg/pc.]	Packing [pcs.]	Part-No.
60,3	50 x 5	65 x 42 x 200	155	148	40	10,50	1	9993378
76,1	50 x 5	65 x 42 x 200	176	166	40	10,74	1	9991592
88,9	50 x 5	65 x 42 x 200	192	179	40	10,94	1	9991611
114,3	50 x 5	65 x 42 x 200	219	205	40	11,31	1	9992192
139,7	50 x 5	80 x 45 x 200	235	231	40	12,44	1	9991612
168,3	50 x 5	120 x 55 x 330	276	258	40	20,15	1	9993874
219,1	50 x 5	120 x 55 x 330	335	309	40	20,91	1	9994028
273 - 274	50 x 5	120 x 55 x 330	396	363	40	21,72	1	9994029
323,9	50 x 5	120 x 55 x 330	449	414	40	22,49	1	9993005
355 - 356	50 x 5	120 x 55 x 330	483	446	40	22,95	1	9993146
406,4	50 x 5	120 x 55 x 330	523	498	40	23,72	1	9993006
457,0	50 x 5	120 x 55 x 330	576	549	40	24,48	1	9993145

Spring insulator FH 1 with one spring

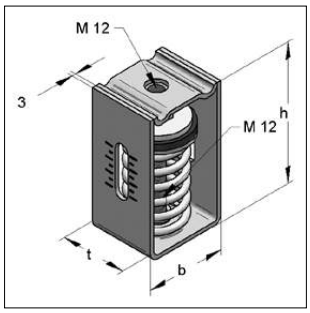

Spring insulator FH1
Load range: up to 3000 N

CENTUM® Holder
Spring insulator FH1

Specification:

Number of springs:	1 piece
Load range:	up to 3000 N
Spring deflection:	up to 32 mm

Technical data:

Material:	steel
Material type:	S235JR
Surface:	galvanized

Identification	Load range [N]	Spring deflection [mm]	Connection thread	Dimension h [mm]	Dimension b [mm]	Dimension t [mm]	Weight [kg/pc.]	Packing [pc.]	Part-No.
FH 1 - 400	0 - 386	0 - 30,0	M12	105	60	50	0,620	1	0794040
FH 1 - 600	0 - 619	0 - 30,0	M12	105	60	50	0,657	1	0794060
FH 1 - 1000	0 - 1006	0 - 32,0	M12	105	60	50	0,659	1	0794100
FH 1 - 1300	0 - 1289	0 - 31,0	M12	130	80	60	1,040	1	0794130
FH 1 - 2100	0 - 2113	0 - 28,0	M12	130	80	60	1,228	1	0794210
FH 1 - 3000	0 - 3084	0 - 23,0	M12	130	80	60	1,266	1	0794300

Spring insulator FH 2 with two springs

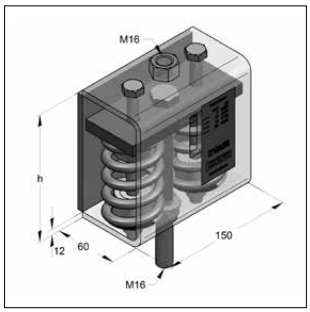

Spring insulator FH2
Load range: up to 9300 N

Specification:

Number of springs:	2 pieces
Load range:	up to 9068 N
Spring deflection:	up to 28,5 mm

Technical data:

Material:	steel
Material type:	S235JR
Surface:	galvanized

Identification	Load range [N]	Spring deflection [mm]	Dimension h [mm]	Dimension width [mm]	Dimension Length [mm]	Weight [kg/pc.]	Packing [pc.]	Part-No.
FH 2 - 4300 plus	0 - 4301	0 - 28,5	140	80	140	4,99	1	079170430
FH 2 - 6000 plus	0 - 6044	0 - 22,5	140	80	140	5,01	1	079170600
FH 2 - 9300 plus	955 - 9068	0 - 19,0	140	80	140	5,03	1	079180930

Spring bearing FL

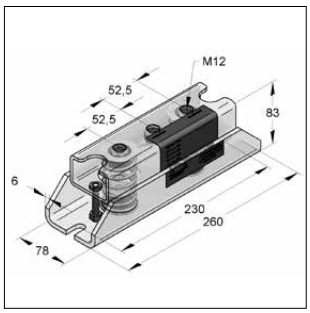

Spring bearing FL
2 springs

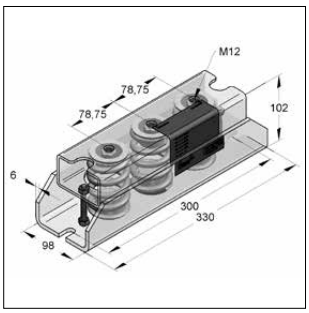

Spring bearing FL
3 springs

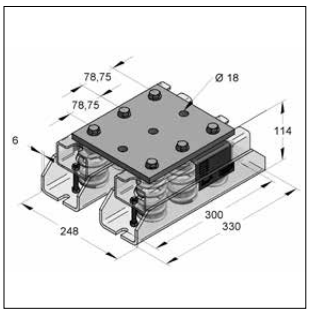

Spring bearing FLD
two spring bearings connected
with interface

Specification:

Number of springs:	2 pieces / 3 pieces
Casing:	type 1 / type 2
Load range:	up to 21354 N
Spring deflection:	up to 26,5 mm
Recommended anchor:	Bolt anchor BZ plus M12

Technical data:

Material:	steel
Material type:	S235JR
Surface:	galvanized

Identification	Casing	Load range [N]	Number of springs	Spring Deflection [mm]	Weight [kg/pc.]	VPE [pc.]	Part-No.
Spring bearing FL							
FL-700	**Type 1**	0 - 682	2	0 - 26,5	3,00	1	07919007
FL-1000	**Type 1**	0 - 1023	3	0 - 26,5	3,10	1	07919010
FL-2300	**Type 2**	0 - 2204	2	0 - 26,5	5,70	1	07919023
FL-3800	**Type 2**	0 - 3999	2	0 - 26,5	5,70	1	07919038
FL-5700	**Type 2**	0 - 5999	3	0 - 26,5	6,00	1	07919057
FL-7200	**Type 2**	0 - 7118	2	0 - 26,5	5,70	1	07919072
FL-10500	**Type 2**	0 - 10677	3	0 - 26,5	6,00	1	07919105
Spring bearing FLD							
FLD-21000		0 - 21354	2 x 3	0 - 26,5	16,23	1	07929210

Design of the spring bearings

In this short documentation the procedure for the correct construction of the spring hanger with critical bending will be explained. The base should be in any case a calculation of the pipeline for the mentioned sector:

Please notice the following production steps:

1. The „free“ forming of the tested pipeline should be detected
2. In case of vertical forming Δs **(Δs ≥ 10mm)** mounting the spring hanger is necessary
3. The static load should be detected on the point of support **(→operation load $F_{V, operation}$)**
4. Spring hanger should be choosed with help of the detected point of support and the suited selection chart (page 3cl5). Please notice that the point of support is situated in the middle of the grid of the selected insulator. The choice of the rigidity is very important as due to the forming the **operation load $\Delta F_V = R \times \Delta s$** cannot cause any **incorrect additional load to the mounted pipeline**
5. Spring hanger **carry the load basically via pressure.** A vertical mounted spring insulator with a negative forming increases the **point of support ΔF**

The effective bearing strength is

$$F_{V,compl.} = F_{V,operation} + (R \times (\pm \Delta s))$$

(in case of positive, on top formings the bearing strength will be reduced → spring insulator will be unload.)

Example: Expansion compensation

Expansion movement of a heating installation pipe of a defined fixpoint line

Known data:	- detected expansion movement	Δs = 16 mm
	- load on the mounting bracket	F_V = 1.300 N
Solution method (see shedule):		
	ⓐ Outlet spring deflection	Δs = 16 mm
	ⓑ Load allocation	F_V = 1.300 N
Result:	ⓒ Choice spring hanger	FH 1 - 2100

Combination of spring bearings:

Series connection

e.g. for the enlargement of spring deflections

F_V = vertical operation load
Δs = spring deflection / vertical forming
R = spring rate

Series connection with 2 equal spring hanger:

$R_{compl} = (R_1 + R_2)/2$

$\Delta S_{compl} = \Delta s_1 + \Delta s_2$

Series connection with 2 different spring hanger:

$R_{compl} = (R_1 \times R_2)/(R_1 + R_2)$

$\Delta S_{compl} = \Delta s_1 + \Delta s_2$

Parallel connection

e.g for the increasing of bearing pressure

F_V = vertical operation load
Δs = spring deflection / vertical forming
R = spring rate

$R_{compl} = R_1 + R_2$

$\Delta S_{compl} = \Delta s/2$

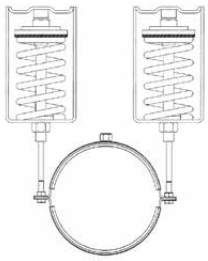

Spring insulator selection table

Spring-insulator	Spring rate	Max. working load	Distance at max. working load	Load dependent on spring deflection s								
					suitable section							
				5 [mm]	10 [mm]	15 [mm]	17,5 [mm]	20 [mm]	22,5 [mm]	25 [mm]	26,5 [mm]	30 [mm]
[Type]	[N/mm]	[N]	[mm]	[N]	[N]	[N]	[N]	[N]	[N]	[N]	[N]	[N]
FH1-400	12,87	386	30,0	64	129	193	225	257	290	322	341	386
FH1-600	20,62	619	30,0	103	206	309	361	412	464	516	546	619
FH1-1000	31,43	1.006	32,0	157	314	471	550	629	707	786	833	943
FH1-1300	41,58	1.289	31,0	208	416	624	728	832	936	1.040	1.102	1.247
FH1-2100	75,46	2.113	28,0	377	755	1.132	1.321	1.509	1.698	1.887	2.000	-
FH1-3000	134,1	3.084	23,0	671	1.341	2.012	2.347	2.682	3.017	-	-	-
FH2-4300 p	150,92	4.301	28,5	755	1.509	2.264	2.641	3.018	3.396	3.773	3.999	-
FH2-6000 p	268,60	6.044	22,5	1.343	2.686	4.029	4.701	5.372	6.044	-	-	-
FH2-9300 p	477,28	9.068	19,0	2.386	4.773	7.159	8.352	-	-	-	-	-
FL-700	25,74	682	26,5	129	257	386	450	515	579	644	682	-
FL-1000	38,61	1.023	26,5	193	386	579	676	772	869	965	1.023	-
FL-2300	83,16	2.204	26,5	416	832	1.247	1.455	1.663	1.871	2.079	2.204	-
FL-3800	150,92	3.999	26,5	755	1.509	2.264	2.641	3.018	3.396	3.773	3.999	-
FL-5700	226,38	5.999	26,5	1.132	2.264	3.396	3.962	4.528	5.094	5.660	5.999	-
FL-7200	268,60	7.118	26,5	1.343	2.686	4.029	4.701	5.372	6.044	6.715	7.118	-
FL-10500	402,90	10.677	26,5	2.015	4.029	6.044	7.051	8.058	9.065	10.073	10.677	-
FL-21000	805,80	21.354	26,5	4.029	8.058	12.087	14.102	16.116	18.131	20.145	21.354	-

Tolerance range of the spring rate -5 / +10 %

Assembly instruction for spring bearing FL

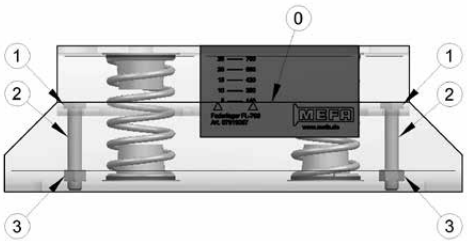

Target: Vibration isolation

1. The spring bearing can be clamped via 2 hex. screws with suitable load for stationary handling with help of prestressed hex. screws M8 (SW13 mm) [1]. (values for direct reading, significant value for direct reading on upper edge of casing base part [0])
2. Spring bearing should be mounted on substructure
3. Spring bearing can be mounted with pipeline or a compressor via:
   3.1 pipe clamp and suitable threaded rod or
   3.2 supporting elements or compressor
4. After achieving operation load at stationary handling the prestressed nut M8 has to be screwed out (SW 13 mm) [1]. Equalisation of springload, bearing sets automatically
5. After balancing spring pot, threaded pins [2] can be removed. Remove counter nuts [3] and screw out threaded pins [2]

Assembly instruction for spring insulator FH 1 and FH 2

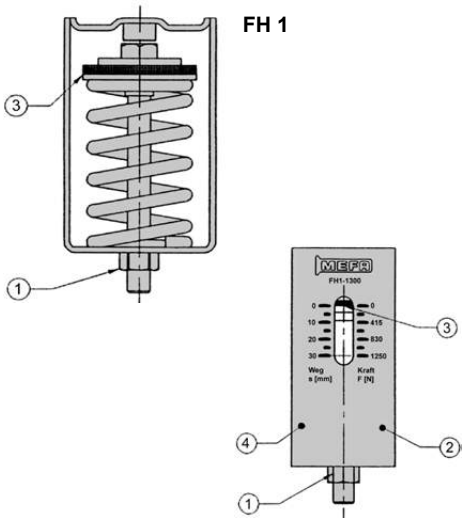

Target: Vibration isolation

1. The spring insulator is prestressed to absorb the load, for stationary handling, via the suitable hex. nut M12 (SW 19 mm) [1] / M16 (SW 24 mm) [6] (for direct reading FH 1: scale on the outside [2] or notch [5] on label, FH 2: bottom edge red washer [3])
2. The spring insulator has to be mounted on the structure
3. Spring insulator with the pipe clamp can be mounted via pipe clamp, compressor or a traverse, with the help of the suitable connecting elements (threaded rod, treaded coupling and counter nut)

   After achieving the operation load at the stationary handling, the hexagon screw [1/6] of the spring insulator should be mounted on the towards-mounted element (e.g. threaded coupling) and used as a counter nut
5. The equalisation of load of the spring pot sets automatically

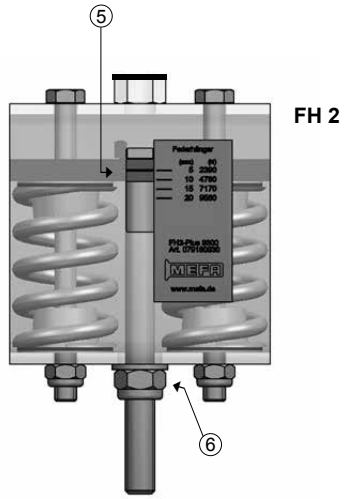

Target: Compensation of expansion movement

1. In a defined, vertical fixpoint pipeline (see drawing a and b) the spring pot can be...

   - pestressed according to **drawing a**, via the hex. screw M12 (SW 19 mm) [1] or M16 (SW 24 mm) [6] (for direct reading FH1: scale on the outside [4] or notch [5] on label, FH 2: bottom edge red washer [3])

     During mounting the pipeline is prestressed !

   - according to **drawing b**, not prestressed

   The pipeline load of this bracket has to be noticed when choosing the spring bearing. The load and the spring deflection have to be regarded. The load of the pipeline increases, in the stationary section, about the amount of the equivalent spring rate to the spring deflection
2. The spring insulator has to be mounted on the structure
3. Spring insulator with the pipe clamp can be mounted via pipe clamp, compressor or a traverse, with the help of the suitable connecting elements (threaded rod, treaded coupling and counter nut or adapted traverse mountings)

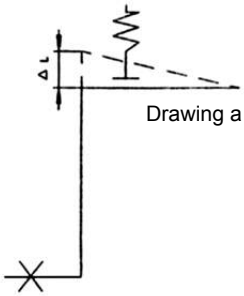

4. Releasing the springs:

   4.1 After successful mounting of the pipeline according to the **drawing a**, should the hex. screw M12 (SW 19 mm) [1] / M16 (SW 24 mm) [6] be mounted on the towards-mounted element (e.g. threaded coupling) and used as a counter nut, before using the pipeline

   4.2 After succesful mounting of the pipeline according to the **drawing b**, should the hex. screw M12 (SW 19 mm) [1] / M16 (SW 24 mm) [6] be mounted on the towards-mounted element (e.g. threaded coupling) and used as a counter nut, before using the pipeline
5. The equalisation of load of the spring pot sets automatically

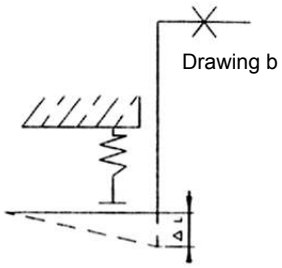

Base plates

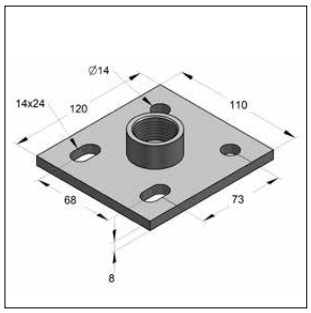

Base plate type IV

Specification:

Application area: plates with threaded connection suitable for mounting on steel structure or profile rails. Used for manufacturing pipe clamp connections via threaded pin/- rod or distance tube.

Remark: Please pay attention to specified distance of axis-center and edge in combination with approved anchors

Technical data:

Material: steel
Material type: S235JR
Surface: galvanized[1)] zinc-nickel
Safety factor: 1,54

Other types of Base plates see MEFA product catalogue or www.mefa.de

Type IV

Identification	Thread	Dimension plate length x width x thickness [mm]	Perforation [mm]	max. load suspension [kN]	Weight [kg/pc.]	Packing [pcs.]	Part-No.
Base plate type IV	**M16**	120 x 110 x 8,0	14,0 x 24,0	14,0	0,83	1	0590555
Base plate type IV	**1/2"**	120 x 110 x 8,0	14,0 x 24,0	14,0	0,82	1	0590556/zn
Base plate type IV	**1"**	120 x 110 x 8,0	14,0 x 24,0	14,0	0,87	1	0590558/zn

Threaded coupling

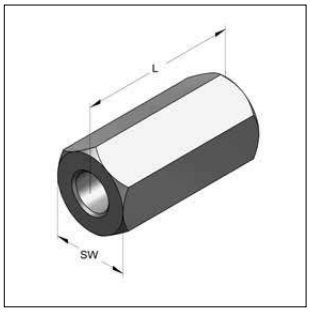

Threaded coupling hexagon

Specification:

Application area: For extension of threaded rods. Hexagonal distance sleeve with checking taps, for sprinkler installations.

Remark: Fire loads on demand

Technical data:

Material: steel
Oberfläche: zinc-nickel

Other Threaded couplings see MEFA product catalogue or www.mefa.de

Threaded coupling hexagon

Identification	Female thread	L [mm]	SW [mm]	Weight [kg/pc.]	Packing [pcs.]	Part-No.
Threaded coupling, hexagon	**M12**	40	17	0,046	50	0700123/zn
Threaded coupling, hexagon	**M16**	50	24	0,136	25	0700167/zn

Threaded rods

Threaded rod

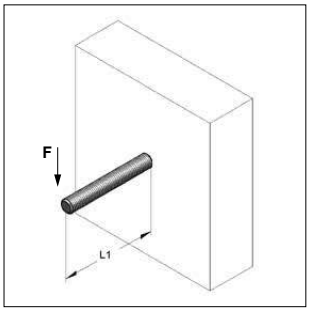

Admissible load* on bending			
Distance L1	**M12**	**M16**	
[mm]	**F[kN]**	**F [kN]**	
50	0,34	0,87	
100	0,17	0,43	
150	0,11	0,29	
200	0,06	0,21	* f_y=235 N/mm²,
250	0,04	0,13	safety factor=1,5,
300	0,03	0,09	E-module=210.000 N/mm²
350	0,02	0,07	max. bending
400	0,01	0,05	f = L/150

04

Specification:
according to DIN EN ISO 976-1
Thread: M12, M16
Length: 1000 mm

Other Threaded rods see MEFA product catalogue or www.mefa.de
[1] FWD = fire endurance

Technical data:
Material: steel
Surface: galvanized
Property class: 4.8
Safety factor FWD[1]: 1,0

Identification	Thread	L [mm]	Limited tractive force max. [kN]	FWD 30 [kN]	FWD 60 [kN]	FWD 90 [kN]	Weight [kg/m]	Packing [pcs.]	Part-No.
Threaded rod	**M12**	1000	20,64	1,83	1,05	0,8	0,735	25	0739137/fvz
Threaded rod	**M16**	1000	38,43	3,42	1,95	1,49	1,306	10	0739162/fvz

Distance tube

Distance tube

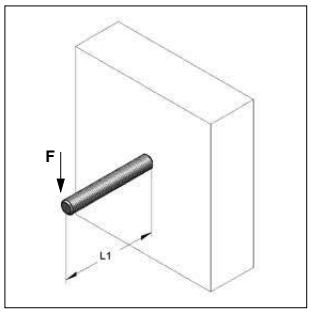

Admissible load* on bending		
Distance L	**1/2"**	**1"**
[mm]	**F [kN]**	**F [kN]**
50	1,482	5,350
100	0,741	2,675
150	0,494	1,783
200	0,371	1,337
250	0,290	1,070
300	0,201	0,892
350	0,148	0,764
400	0,113	0,665
450	0,089	0,525
500	0,072	0,425
* at $\sigma_{zul.}$ = 160 N/mm², max. bending f = L/150		

Specification:
Version: tube with male thread
Thread: according to DIN EN ISO 228 „G“

Technical data:
Material: steel
Surface: zinc-nickel

Identification	Thread	Length [mm]	Weight [kg/pc.]	Packing [m]	Part-No.
Distance tube	**1/2"**	2000	1,88	2	0737002/zn
Distance tube	**1"**	2000	5,18	2	0737004/zn

Hexagon nut

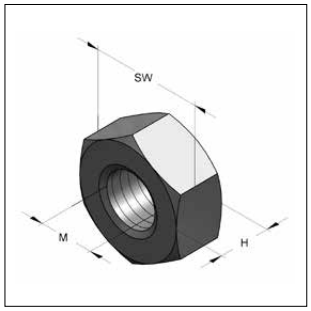

Hexagon nut

Specification:
according to DIN EN ISO 4032

Technical data:
Material: steel
Surface: galvanized

Other DIN- and Standard parts see MEFA product catalogue or www.mefa.de

Identification	Thread M	Height H [mm]	Wrench size SW	Weight [kg/pc.]	Packing [pcs.]	Part-No.
Hexagon nut	**M10**	8,0	17	0,012	100	4120477/fvz
Hexagon nut	**M12**	10,0	19	0,017	100	4120485/fvz
Hexagon nut	**M16**	13,0	24	0,039	100	4120523/fvz

Hexagon screw

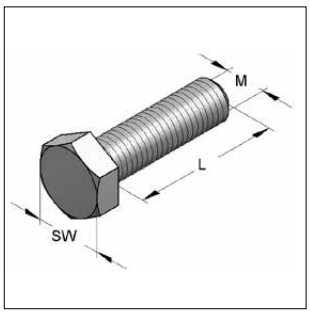

Hexagon screw

Specification:
according to DIN EN ISO 4017
Thread: M12, M16

Technical data:
Material: steel
Surface: galvanized
Property class: 8.8

Other DIN- and Standard parts see MEFA product catalogue or www.mefa.de

Identification	Thread M	Wrench size SW	Length L [mm]	Weight [kg/pc.]	Packing [pcs.]	Part-No.
Hexagon screw	**M12**	19	25	0,039	100	3206591/fvz
			40	0,052	100	3206606/fvz
			55	0,065	100	320660655/fvz
Hexagon screw	**M16**	24	30	0,086	50	3207630/fvz
			60	0,133	25	3207660/fvz
			90	0,180	25	3207690/fvz

ⓘ locking screws and nuts M20/M24 on request

Washer

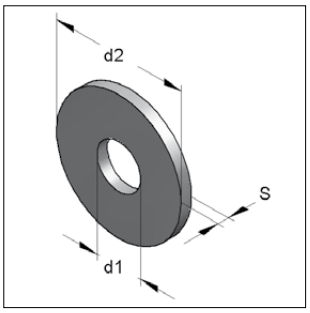

Washer
(according to DIN EN-ISO 7089)

Specification:
reinforced washer with enlarged outer diameter, enlarged surface, improved pressure distribution

Other DIN- and Standard parts see MEFA product catalogue or www.mefa.de

Technical data:
Material: steel
Surface: galvanized

Identification	Dimension d1 x d2 x S [mm]	DIN EN-ISO	Weight [kg/pc.]	Packing [pcs.]	Part-No.
Washer	**13,0 x 24,0 x 2,5**	7089	0,007	100	4320271/fvz
Reinforced washer	**13,0 x 37,0 x 3,0**	7093-1	0,023	100	4330277/fvz
Reinforced washer	**17,0 x 50,0 x 3,0**	7093-1	0,041	100	4330285/fvz

Girder clamp MKS

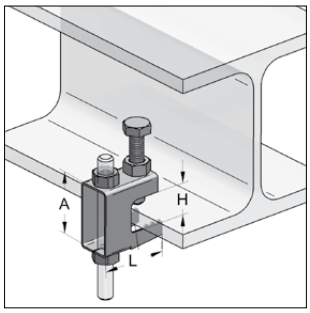

Girder clamp MKS

FM APPROVED

Specification:
Application area: fast and simple mounting at steel structures and profiles
Variable height-adjustment: possible via hole
possible via thread
Clamp bolt screw: steppless adjustment of different clamp bolt strengths

Technical data:
Material: steel
Surface: galvanized

Identification	Thread	Borehole [mm]	L [mm]	A [mm]	H [mm]	max. load [kN]	Weight [kg/pc.]	Packing [pcs.]	Part-No.
With hole									
Girder clamp MKS 10	for M10	11	44	44	0-20	2,5	0,134	50	0576805
Girder clamp MKS 12	for M12	13	58	56	0-26	3,5	0,236	50	0576807
With thread									
Girder clamp MKS 10	M10	-	44	44	0-20	2,5	0,134	50	0576806
Girder clamp MKS 12	M12	-	58	56	0-26	3,5	0,236	50	0576808

Girder clamp, cast iron

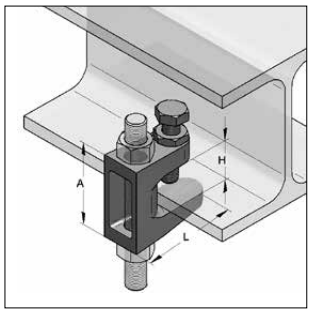

Girder clamp, cast iron

VdS
G 403 0026
G 403 0044

FM APPROVED ab M10

Specification:

Application area:	fast and simple mounting at steel structures and profiles
Variable height-adjustment:	possible via hole possible via thread
Clamp bolt screw:	steppless adjustment of different clamp bolt strengths
Brand:	VS Guss

Technical data:

Material:	malleable cast iron
Surface:	galvanized
Approval:	VdS and FM (starting with M10) approved VdS-approval number: G 403 0026

Other Girder clamps see MEFA product catalogue or www.mefa.de

Identification	Thread	Bore hole [mm]	L [mm]	A [mm]	H [mm]	max. load [kN]	Weight [kg/pc.]	Packing [pcs.]	Part-No.
With hole									
Girder clamp TK 12	for M12	13	58	54	26	3,5	0,216	50	0579462
Girder clamp TK 16	for M16	17	58	58	28	5,5	0,318	50	0579448
With thread									
Girder clamp TK 12	M12	-	58	54	26	3,5	0,216	50	0579562
Girder clamp TK 16	M16	-	58	58	26	5,5	0,318	50	0579548

Safety lug

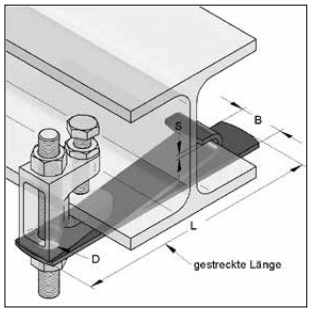

Safety lug

Specification:

Application:	for stationary sprinkler plant constructions according to VdS codes. Recommended for pipes above 3"

Technical data:

Material:	steel
Material type:	S235JR
Surface:	galvanized

Identification	Type	for OD	Drilling D [mm]	Material length x width x thickness [mm]	Weight [kg/pc.]	Packing [pcs.]	Part-No.
Safety lug	**S 5**	5" - 6"	13,5	300 x 30 x 3,0	0,213	50	0579305
Safety lug	**S 8**	8"	17,0	300 x 45 x 3,0	0,319	50	0579308

Girder clamp F3, two-part

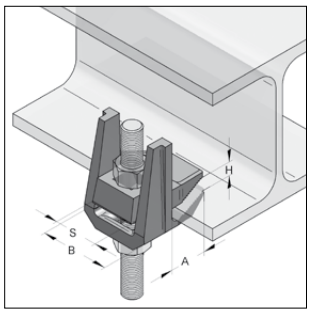

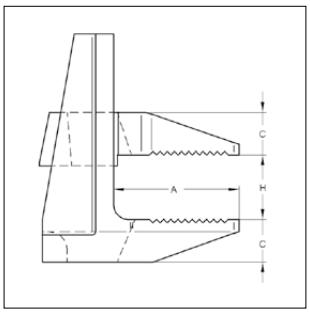

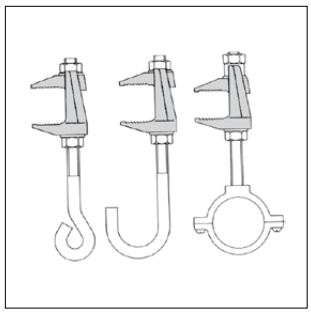

Girder clamp F3
two-part

Specification:

Application area: mounting of suspensions on steel girder up to 55 mm flange thickness
Mounting: mounting cin combination with hexagon screws, threaded rods or carriage bolt (not included)
Brand: Lindapter

* safety factor 4:1 against breaking

Technical data:

Material: malleable cast iron
Surface: hot-dip galvanized

Remark: Not suitabe for disposed flanges

Identification	Type	Suited thread	max. load tensile* [kN]	Tightening torque (property class screw 4.6) [Nm]	Dimension A [mm]	H [mm]	C [mm]	B [mm]	S [mm]	Weight [Kg/pc.]	Packing [pc.]	Part-No.
Girder clamp	**F3/M12**	M12	2,00	39	35	0-40	12	49	29	0,301	1	0579637
Girder clamp	**F3/M16**	M16	4,00	93	46	0-55	16	60	36	0,610	1	0579649

Girder clamp F9

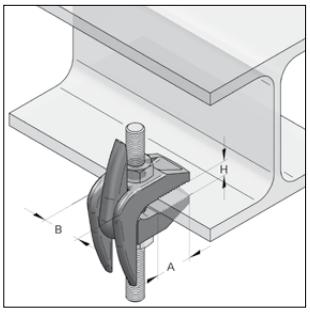

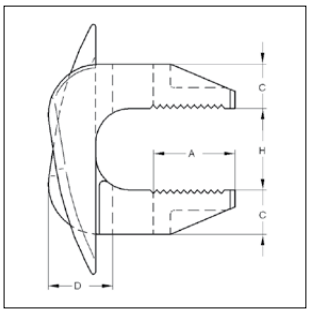

Girder clamp F9

Specification:

Application area: mounting of strong walled steel girder up to 82 mm flange thickness.

* safety factor 5:1 against breaking

Other Girder clamps see MEFA product catalogue or www.mefa.de

Technical data:

Material: malleable cast iron
Surface: galvanized

Remark: Not suitabe for disposed flanges

Identification	Type	max. load tensile* [kN]	Tightening torque (property class screw 4.6) [Nm]	Dimension A [mm]	H [mm]	C [mm]	D [mm]	B [mm]	Weight [Kg/pc.]	Packing [pc.]	Part-No.
Girder clamp	**F9/M12**	2,80	39,0	35	26-60	17	24	30	0,430	1	0579703
Girder clamp	**F9/M16**	5,60	93,0	43	29-69	21	28	35	0,688	1	0579704
Girder clamp	**F9/M20**	8,40	177,0	51	32-82	25	35	44	1,134	1	0579705

Bolt anchor BZ plus

Bolt anchor BZ plus
Bolt anchor BZ plus 4A

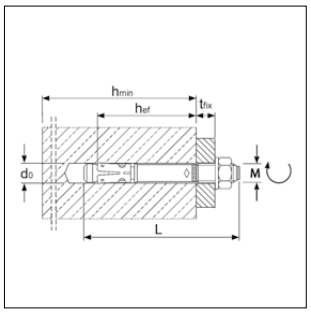

ETA-99/0010

ZIVILSCHUTZ 1)

FM approved M10-M16 1)

M 8 - M 20

SEISMIC 1)

Brandschutz-geprüft 1)

04

Specification:

Application area:	cracked and non-cracked concrete C20/25 up to C50/60
installation advise:	bolt anchor for pre-fabrication and push-through-assembling

Technical data:

Material BZ plus:	steel
Surface:	galvanized
Material BZ plus A4:	stainless steel V4A
Approval:	ETA-99/0010

Application example: Anchorage for moderately heavy up to heavy loads in cracked and uncracked concrete: Pillars, steel girder, handrail fittings, cable routes, wooden construction, consoles.

Other anchors see MEFA product catalogue or www.mefa.de

1) Applies only for standard anchorage depth

Bolt anchor BZ plus, galvanized

Identification	standard anchorage depth / reduced anchorage depth: clamping strength [mm]		Drill-Ø x Drillhole depth [mm]		Setting-depth [mm]		anchoring depth [mm]		Seismic1) C1 / C2	Anchor-length [mm]	Thread [mm]	Weight [kg/100]	Packing [pcs.]	Part no.
BZ 12 -15-35/110	15	35	12x90	12x70	80	60	70	50	ja	110	M12x51	10,20	25	221112015
BZ 12 -30-50/125	30	50	12x90	12x70	80	60	70	50	ja	125	M12x66	11,36	25	22111203001
BZ 12 -50-70/145	50	70	12x90	12x70	80	60	70	50	ja	145	M12x86	12,92	25	221112050
BZ 12 -105-125/200	105	125	12x90	12x70	80	60	70	50	ja	200	M12x141	16,84	25	221112105
BZ 16 -15-35/135	15	35	16x110	16x90	97	77	85	65	ja	135	M16x56	23,00	20	221116015
BZ 16 -25-45/145	25	45	16x110	16x90	97	77	85	65	ja	145	M16x66	35,00	20	221116025
BZ 16 -80-100/200	80	100	16x110	16x90	97	77	85	65	ja	220	M16x121	32,00	10	221116080

Bolt anchor BZ plus A4, stainless steel

BZ 12 -15-35/110	15	35	12x90	12x70	80	60	70	50	ja	110	M12x51	10,20	25	222112015
BZ 12 -30-50/125	30	50	12x90	12x70	80	60	70	50	ja	125	M12x66	11,36	25	222112030
BZ 12 -50-70/145	50	70	12x90	12x70	80	60	70	50	ja	145	M12x86	12,92	25	222112050
BZ 12 -105-125/200	105	125	12x90	12x70	80	60	70	50	ja	200	M12x141	19,72	25	222112105
BZ 16-25-45/145	25	45	16x110	16x90	97	77	85	65	ja	145	M16x66	23,40	20	222116025

Please regard delivery times
Please regard delivery times

Rost frei

Delivery time: 3 working days

Loads see on page 4/16 ff.

Load values Bolt anchor BZ plus

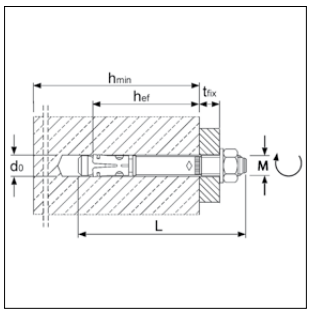

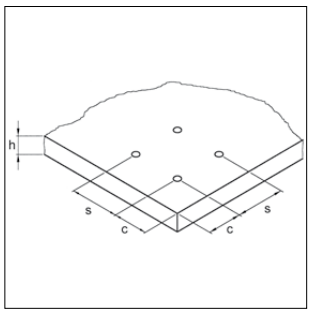

ETA-99/0010

Extract from Permissible Service Conditions of ETA-99/0010

Approved loads for single anchor without influence of spacing and edge distance.
Total safety factor as per ETAG 001 included (γ_M und γ_F).

Loads and performance data	bolt anchor BZ plus		M 8		M 10		M 12		M 16	
standard anchorage depth	h_{ef}	[mm]	46	-	60	-	70	-	85	-
reduced anchorage depth	$h_{ef,\ red}$	[mm]	-	35	-	40	-	50	-	65
					cracked concrete					
Mean ultimate loads, tension	C20/25 appr. N	[kN]	2,4	2,4	4,3	3,6	7,6	6,1	11,9	9,0
	C25/30 appr. N	[kN]	2,6	2,6	4,7	3,9	8,3	6,6	13,0	9,8
	C30/37 appr. N	[kN]	2,9	2,9	5,2	4,3	9,3	7,4	14,5	10,9
	C40/50 appr. N	[kN]	3,4	3,4	6,1	5,1	10,8	8,6	16,8	12,7
	C50/60 appr. N	[kN]	3,7	3,7	6,6	5,5	11,8	9,4	18,4	13,9
					non-cracked concrete					
Approved loads, tension	C20/25 appr. N	[kN]	5,7	3,6	7,6	4,3	11,9	8,5	16,7	12,6
	C25/30 appr. N	[kN]	6,3	3,9	8,3	4,7	13,0	9,3	18,3	13,8
	C30/37 appr. N	[kN]	7,0	4,3	9,3	5,2	14,5	10,3	20,3	15,3
	C40/50 appr. N	[kN]	7,5	5,1	10,8	6,1	16,8	12,0	23,6	17,8
	C50/60 appr. N	[kN]	7,5	5,5	11,8	6,6	18,4	13,2	25,8	19,5
					cracked / non-cracked concrete					
Approved loads, shear	C20/25 appr. V	[kN]	7,0	7,0	11,5	10,4/11,5	17,1	14,5/17,1	31,4	21,6/30,2
	≥ C25/30 appr. V	[kN]	7,0	7,0	11,5	11,4/11,5	17,1	15,9/17,1	31,4	23,6/31,4
Approved bending moments	appr. M	[Nm]	13,1	13,1	26,9	26,9	46,9	46,9	123,4	123,4
Spacing and edge distance										
Effective anchorage depth	h_{ef}	[mm]	46	35	60	40	70	50	85	65
Characteristic spacing	$s_{cr,\ N}$	[mm]	138	105	180	120	210	150	255	195
Characteristic edge distance	$c_{cr,\ N}$	[mm]	69	52,5	90	60	105	75	127,5	97,5
Respective minimum spacing and edge distance for standard thickness of concrete member										
					cracked concrete					
Standard thickness of concrete slab	$h_{min,\ 1}$	[mm]	100	-	120	-	140	-	170	-
Minimum spacing / for edge distance c	s_{min} / c	[mm]	40 / 70	-	45 / 70	-	60 / 100	-	60 / 100	-
Minimum edge distance / for spacing s	c_{min} / s	[mm]	40 / 80	-	45 / 90	-	60 / 140	-	60 / 180	-
					ungerissener Beton					
Minimum spacing / for edge distance c	s_{min} / c	[mm]	40 / 80	-	45 / 70	-	60 / 120	-	65 / 120	-
Minimum edge distance / for spacing s	c_{min} / s	[mm]	50 / 100	-	50 / 100	-	75 / 150	-	80 / 150	-
Respective minimum spacing and edge distance for minimum thickness of concrete member										
					cracked concrete					
Minimum component thickness	h_{min2} / h_{min3}	[mm]	80	80	100	80	120	100	140	140
Minimum spacing / for edge distance c	s_{min} / c	[mm]	40 / 70	50/60	45 / 90	50/100	60 / 100	50/160	70 / 160	65/170
Minimum edge distance / for spacing s	c_{min} / s	[mm]	40 / 80	40/185	50 / 115	65/180	60 / 140	65/250	80 / 180	100/250
					non-cracked concrete					
Minimum spacing / for edge distance c	s_{min} / c	[mm]	40 / 80	50/60	60 / 140	50/100	60 / 120	50/160	80 / 180	65/170
Minimum edge distance / for spacing s	c_{min} / s	[mm]	50 / 100	40/185	90 / 140	65/180	75 / 150	100/185	90 / 200	170/65
Installation parameters										
Drill hole diameter	d_o	[mm]	8	8	10	10	12	12	16	16
Diameter of clearance hole in the fixture	d_f	[mm]	9	9	12	12	14	14	18	18
Depth of drill hole	h_1	[mm]	60	49	75	55	90	70	110	90
Installation torque	T_{inst}	[Nm]	20	20	25	25	45	45	90	90
Width across nut	SW	[mm]	13	13	17	17	19	19	24	24

Load values Bolt anchor BZ plus A4

Loads and performance data	bolt anchor BZ plus A4			M 8		M 10		M 12		M 16	
standard anchorage depth		h_{ef}	[mm]	46	-	60	-	70	-	85	-
reduced anchorage depth		$h_{ef,\ red}$	[mm]	-	35	-	40	-	50	-	65
						cracked concrete					
Mean ultimate loads, tension	C20/25	appr. N	[kN]	2,4	2,4	4,3	3,6	7,6	6,1	11,9	9,0
	C25/30	appr. N	[kN]	2,6	2,6	4,7	3,9	8,3	6,6	13,0	9,8
	C30/37	appr. N	[kN]	2,9	2,9	5,2	4,3	9,3	7,4	14,5	10,9
	C40/50	appr. N	[kN]	3,4	3,4	6,1	5,1	10,8	8,6	16,8	12,7
	C50/60	appr. N	[kN]	3,7	3,7	6,6	5,5	11,8	9,4	18,4	13,9
						non-cracked concrete					
Approved loads, tension	C20/25	appr. N	[kN]	5,7	3,6	7,6	4,3	11,9	8,5	16,7	12,6
	C25/30	appr. N	[kN]	6,3	3,9	8,3	4,7	13,0	9,3	18,3	13,8
	C30/37	appr. N	[kN]	7,0	4,3	9,3	5,2	14,5	10,3	20,3	15,3
	C40/50	appr. N	[kN]	7,5	5,1	10,8	6,1	16,8	12,0	23,6	17,8
	C50/60	appr. N	[kN]	7,5	5,5	11,8	6,6	18,4	13,2	25,8	19,5
						cracked / non-cracked concrete					
Approved loads, shear	C20/25	appr. V	[kN]	7,0	7,0	11,5	10,4/11,5	17,1	14,5/17,1	31,4	21,6/30,2
	≥ C25/30	appr. V	[kN]	7,0	7,0	11,5	11,4/11,5	17,1	15,9/17,1	31,4	23,6/31,4
Approved bending moments		appr. M	[Nm]	13,1	13,1	26,9	26,9	46,9	46,9	123,4	123,4
Spacing and edge distance											
Effective anchorage depth		h_{ef}	[mm]	46	35	60	40	70	50	85	65
Characteristic spacing		s_{cr}, N	[mm]	138	105	180	120	210	150	255	195
Characteristic edge distance		c_{cr}, N	[mm]	69	52,5	90	60	105	75	127,5	97,5
Respective minimum spacing and edge distance for standard thickness of concrete member											
						cracked concrete					
Standard thickness of concrete slab		$h_{min,\ 1}$	[mm]	100	-	120	-	140	-	170	-
Minimum spacing / for edge distance c		s_{min} / c	[mm]	40 / 70	-	45/70	-	60 / 100	-	60 / 100	-
Minimum edge distance / for spacing s		c_{min} / s	[mm]	40 / 80	-	45/90	-	60 / 140	-	60 / 180	-
						non-cracked concrete					
Minimum spacing / for edge distance c		s_{min} / c	[mm]	40 / 80	-	45 / 70	-	60 / 120	-	65 / 120	-
Minimum edge distance / for spacing s		c_{min} / s	[mm]	50 / 100	-	50 / 100	-	75 / 150	-	80 / 150	-
Respective minimum spacing and edge distance for minimum thickness of concrete member											
						cracked concrete					
Minimum component thickness		h_{min}	[mm]	80	80	100	80	120	100	140	140
Minimum spacing / for edge distance c		s_{min} / c	[mm]	40 / 70	50/60	45 / 90	50/100	60 / 100	50/160	70 / 160	65/170
Minimum edge distance / for spacing s		c_{min} / s	[mm]	40 / 80	40/185	50 / 115	65/180	60 / 140	65/250	80 / 180	100/250
						non-cracked concrete					
Minimum spacing / for edge distance c		s_{min} / c	[mm]	40 / 80	50/60	60 / 140	50/100	60 / 120	50/160	80 / 180	65/170
Minimum edge distance / for spacing s		c_{min} / s	[mm]	50 / 100	40/185	90 / 140	65/180	75 / 150	100/185	90 / 200	170/65
Installation parameters											
Drill hole diameter		d_o	[mm]	8	8	10	10	12	12	16	16
Diameter of clearance hole in the fixture		d_f	[mm]	9	9	12	12	14	14	18	18
Depth of drill hole		h_1	[mm]	60	49	75	55	90	70	110	90
Installation torque		T_{inst}	[Nm]	20	20	25	25	45	45	110	90
Width across nut		SW	[mm]	13	13	17	17	19	19	24	24

Injection system VMZ

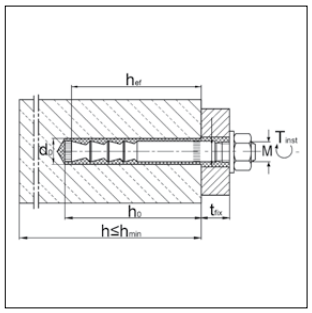

ETA- 04/0092

ZIVILSCHUTZ

Brandschutz-geprüft

SEISMIC
M10 - M16

Anchor rod VMZ-A
Anchor rod VMZ-A A4

Specification:

Application area: cracked and non-cracked concrete C20/25 up to C50/60

Installation advise: composite spread anchor for pre- and through fastening installation in conjunction with Injection cartridge VMZ

Required accessory: two component cartridge VMZ, Cleaning Brush, Blow-out pump

Technical data:

Material VMZ-A: steel
Surface: galvanized
Material VMZ-A A4: stainless steel V4A

Approval: ETA-04/0092

Application example: heavy duty fastenings in cracked and non-cracked concrete, e.g. steel beams, steel supports, railings, brackets, facade substructures, cable trays.

Other anchors see MEFA product catalogue or www.mefa.de

Anchor rod VMZ-A, galvanized

Identification	Drill-Ø x Drillhole depth [mm]	Setting-depth [mm]	Max. clamping-strength [mm]	Anchor-length [mm]	SW	Torque T_{inst} [Nm]	Thread M [mm]	Weight [kg/100]	Packing [pcs.]	Part no.
VMZ-A 80 M12-10/110	14 x 85	84	10	110	19	25	M12x21	11,70	10	221832305101
VMZ-A 80 M12-25/125	14 x 85	84	25	125	19	25	M12x36	12,80	10	221832325101
VMZ-A 100 M12-60/180	14 x 105	104	60	180	19	30	M12x56	17,50	10	221832385101
VMZ-A 105 M16-30/160	18 x 113	109	30	160	24	50	M16x44	24,50	10	221832550101
VMZ-A 125 M16-60/210	18 x 133	130	60	210	24	50	M16x55	36,00	10	221832520101

Anchor rod VMZ-A, stainless steel V4A

VMZ-A 80 M12-25/125/A4	14 x 85	84	25	125	19	25	M12x36	12,80	10	222832325501
VMZ-A 100 M12-60/180/A4	14 x 105	104	60	180	19	30	M12x56	17,50	10	222832385501
VMZ-A 105 M16-30/160/A4	18 x 113	109	30	160	24	50	M16x44	24,50	10	222832550501
VMZ-A 125 M16-60/210/A4	18 x 133	130	60	210	24	50	M16x55	36,00	10	222832520501

Please regard delivery times

Edelstahl Rostfrei

Delivery time: 3 working days

Loads see on page Seite 4/20

Load values Conical Stud VMZ-A / VMZ-A A4

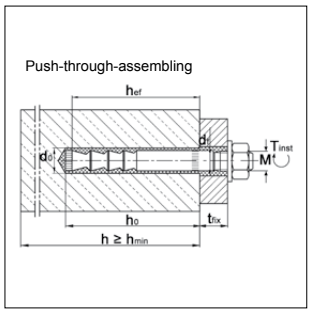

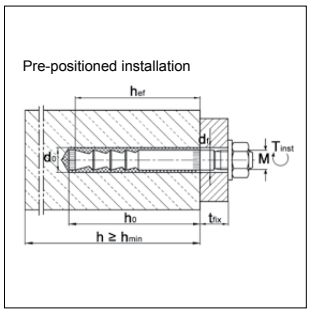

ETA- 04/0092

Extract from Permissible Service Conditions of ETA-04/0092

Approved loads for single anchor without influence of spacing and edge distance.
Total safety factor as per ETAG 001 included (γ_M und γ_F).

Loads for different mounting depth on request.

04

Loads and performance data	Conical Stud VMZ-A / VMZ-A A4		80 M 12	100 M 12	105 M16	125 M 16
				cracked concrete		
Mean ultimate loads, tension	C20/25 Zul. N	[kN]	12,3	17,1	18,4	24,0
	C25/30 Zul. N	[kN]	13,5	18,9	20,3	26,4
	C30/37 Zul. N	[kN]	15,0	20,9	22,5	29,2
	C40/50 Zul. N	[kN]	17,3	24,2	26,0	33,8
	C50/60 Zul. N	[kN]	19,0	26,6	28,6	37,1
				non-cracked concrete		
Mean ultimate loads, tension	C20/25 Zul. N	[kN]	17,2	24,0	25,8	33,5
	C25/30 Zul. N	[kN]	18,9	26,4	28,4	36,9
	C30/37 Zul. N	[kN]	21,0	27,1	31,5	40,9
	C40/50 Zul. N	[kN]	24,2	27,1	36,4	47,3
	C50/60 Zul. N	[kN]	25,7	27,1	40,0	52,0
				cracked / non-cracked concrete		
Approved loads, shear	≥ C20/25 Zul. V	[kN]	19,4	19,4	36,0	36,0
Approved loads, shear Version LG	≥ C20/25 Zul. V	[kN]	19,4	19,4	36,0	36,0
Approved bending moments	Zul. M	[Nm]	60,0	60,0	152,0	152,0
Spacing and edge distance						
Effective anchorage depth	h_{ef}	[mm]	80	100	105	125
Characteristic spacing	$s_{cr,N}$	[mm]	240	300	315	375
Characteristic edge distance	$c_{cr,N}$	[mm]	120	150	157,5	187,5
				cracked concrete		
Minimal thickness of concrete member	$\geq h_{min}$	[mm]	110	130	150	170
Minimal spacing	s_{min}	[mm]	40	50	50	60
Minimal edge distance	c_{min}	[mm]	50	50	50	60
				non-cracked concrete		
Minimal thickness of concrete member	$\geq h_{min}$	[mm]	110	130	150	170
Minimal spacing	s_{min}	[mm]	55	80[1)]	60	60
Minimal edge distance	c_{min}	[mm]	55	55[1)]	60	60
Installation parameters						
Drill hole diameter	d_o	[mm]	14	14	18	18
Diameter of clearance hole in the fixture Pre-positioned installation	d_f	[mm]	14	14	18	18
Diameter of clearance hole in the fixture Push-through-assembling[2)]	d_f	[mm]	16	16	20	20
Depth of drill hole	h_o	[mm]	85	105	113	133
Installation torque	T_{inst}	[Nm]	25	30	50	50
Width across nut	SW	[mm]	19	19	24	24
Drilling hole filling capacity, scaling on cartridge 345		[mm]	5	6	8	9
Mortar demand per drilling hole[3)]		[ml]	8,6	9,2	12,6	14,5
additional mortar demand per drilling hole at draw lead mounting per 10mm		[ml/10mm]	1,2	1,2	1,6	1,6
Drill holes per cartridge[3)] VMZ 150		[pcs.]	12	11	8	7
Drill holes per cartridge[3)] VMZ 345		[pcs.]	34	32	23	20
Drill holes per cartridge[3)] VMZ 410		[pcs.]	43	40	29	25

[1)] for edge distance c ≥ 80 mm, minimal center distance smin = 55 mm
[2)] The annular gap in attached part must be completely filled with mortar after mounting
[3)] Only cotter mounting. For draw-lead mounting a additional quantity of mortar is needed for filling of clearence hole
max. long-term temperature +50°C / max. short-term temperature +80°C

Injection cartridge VMZ and accessories

Cartridge VMZ 345
(a Static mixer enclosed)

Cartridge VMZ 280
for silicone guns
(two Static mixer enclosed)

ETA- 04/0092

ZIVILSCHUTZ

Brandschutz-geprüft

SEISMIC
M10 - M16

04

Injection cartridge

Identification	Dispenser	Content [ml]	Packing [pcs.]	Weight [Kg/pc.]	Part-no.
Cartridge VMZ 280	Silicon Dispenser	280	1	0,56	530828252601
Cartridge VMZ 345	VM-P 345 Standard	345	1	0,69	530828255310

Mixer nozzle

Mixer nozzle VM-X		-	1	0,02	530828305111
Mixer extension VM-XE (200 mm)		-	1	-	530828306011

Accessory Injection cartridge VMZ

Dispenser VM-P 345
Standard

Blow-out pump VM-AP 360

RB 14/18 M6 (for VMZ)

Remark: Cleaning of drilling hole being part of anchor approval

Accessory Injection cartridge VMZ 345

Identification	Packing [pcs.]	Part-no.
Dispenser VM-P 345 Standard	1	530828350505
Blow-out pump VM-AP 360	1	530833200101

Cleaning brush

Cleaning brush RB 14 M6 (for VMZ)	1	530833514101
Cleaning brush RB 18 M6 (for VMZ)	1	530833518101

CENTUM®-mounting examples

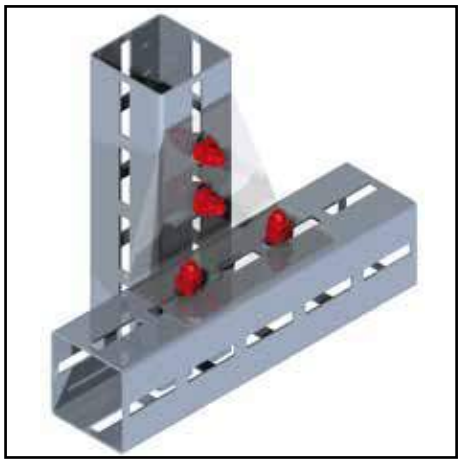

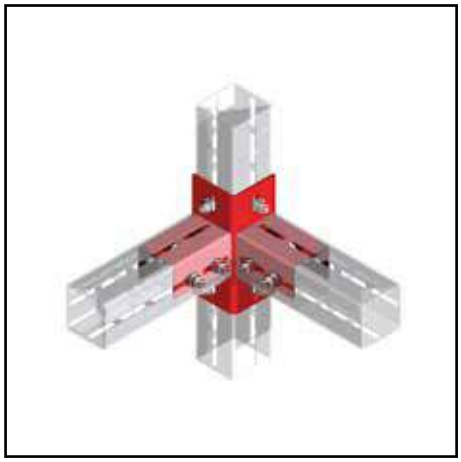

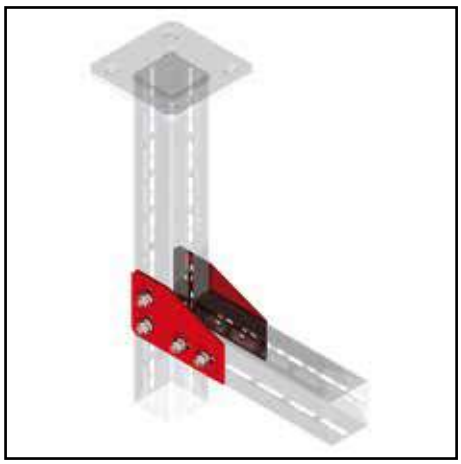

CENTUM®-mounting examples

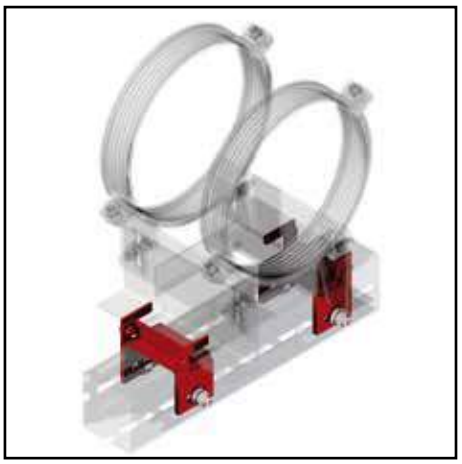

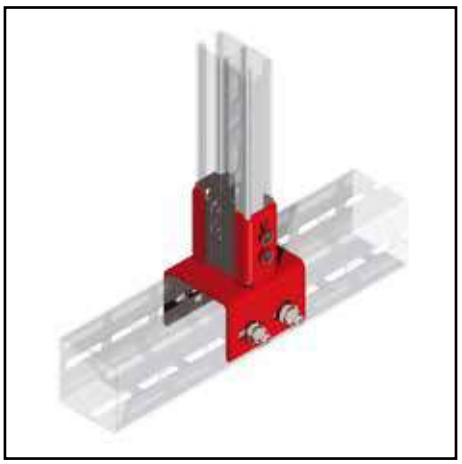

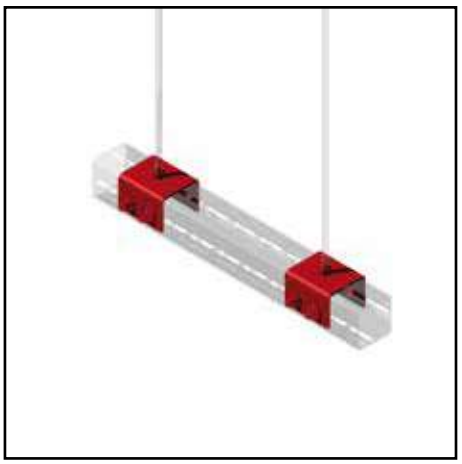

CENTUM®-mounting examples

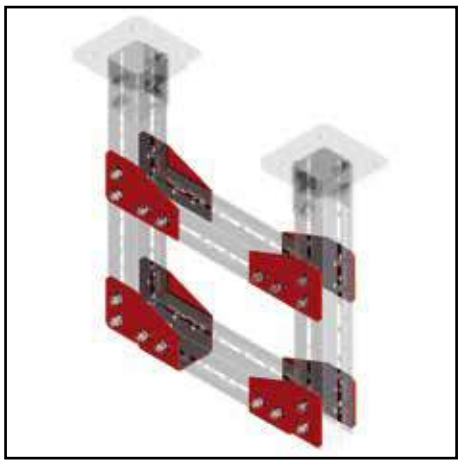

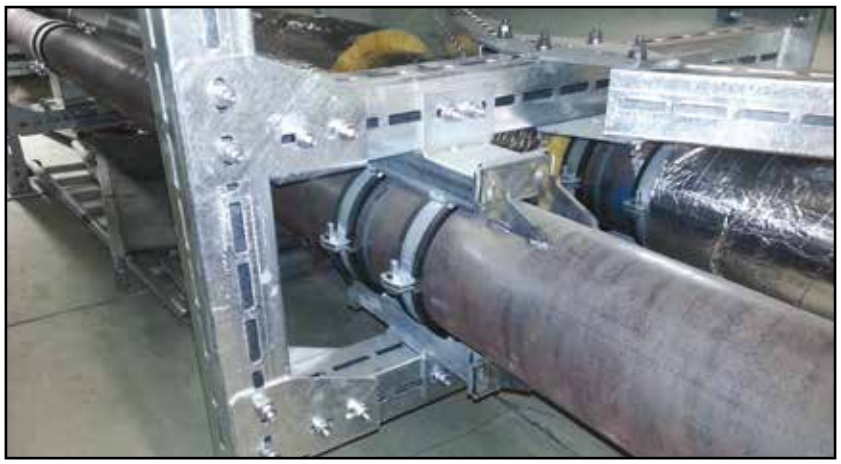

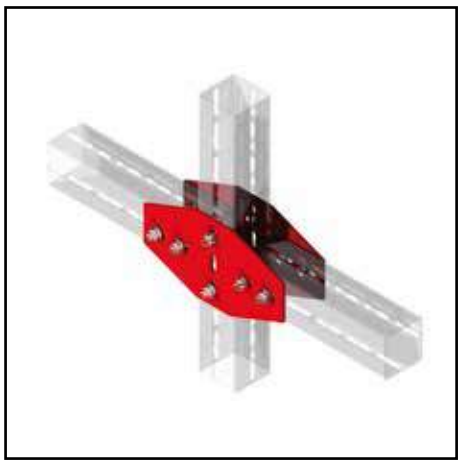

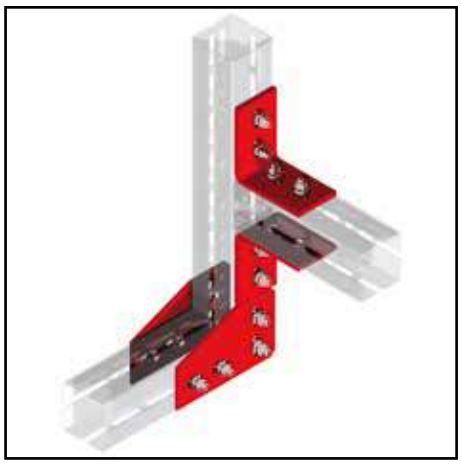

CENTUM®-mounting examples

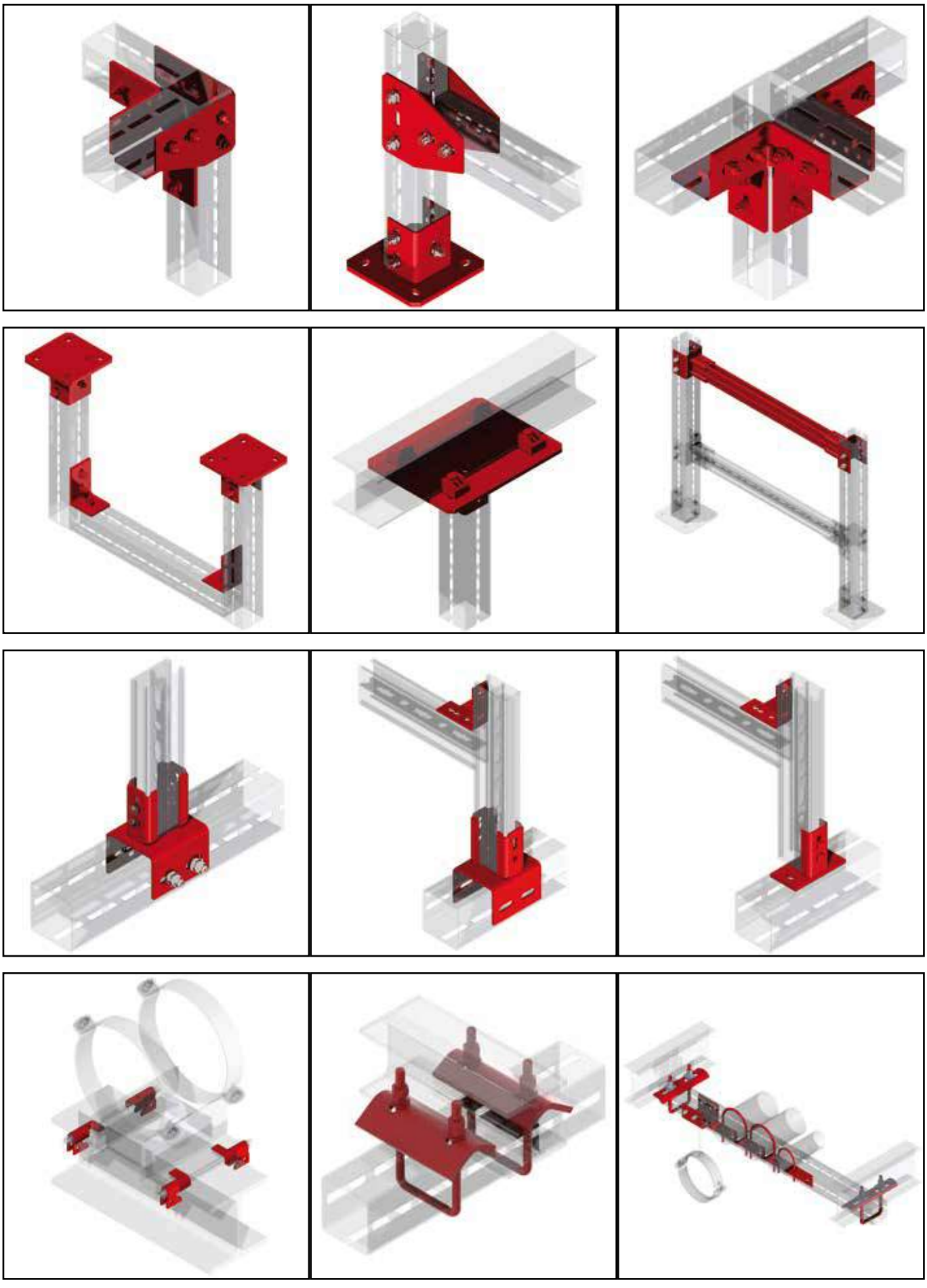

MEFA-Planning support

MEFA offers its customers extensive support. Our team of well-experieneed engineers support the entire scope of planning. From admission of data and generation of technical solutions, also on site, through design of pipe-line and air duct alignment, to fixpoint calculations.

In addition to afore mentioned support thru our technical department, we offer you various software tools.

- **TRICAD MS**

  Interface compatible provision of CENTUM® components and C-profile channel system 45 for implementation in various TRICAD MS®-modules.

- **MEFA-E3D / pdms 12 till 12.1**

  Interface compatible provision of CENTUM components and C-profile channel system 45 for implementation in various 3D-planning systems.

- **MEFA statiCAL**

  Static load calculation software for HVAC contractors for planning of fastening solutions.

- **MEFA ProfiDesigner (generate a shopping cart in pdf and excel format)**

  CAD-component database of MEFA products for implementation in 2D- and 3D-applications.

- **MEFA eShop**

  Catalog and shop system with structured search function

Our application engineering is prepared to solve special tasks and problems and to give you advice at any time.

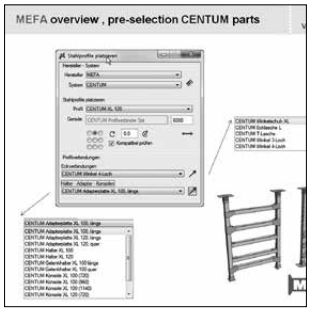

TRICAD MS
Page 6/2

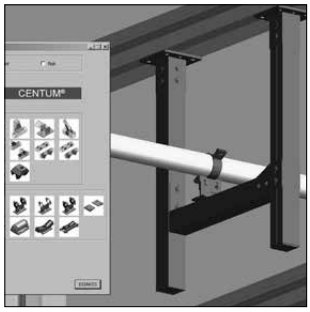

MEFA-E3D
Page 6/3

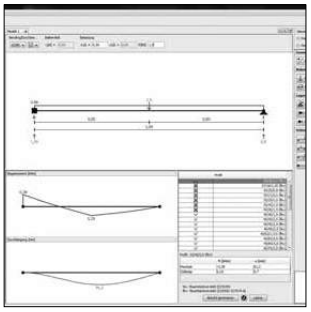

MEFA statiCAL
Page 6/4

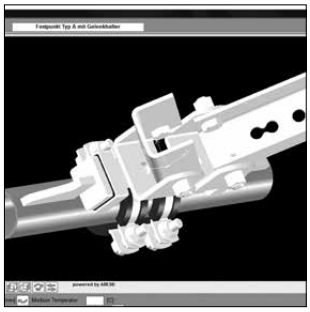

MEFA ProfiDesigner 3.1
Page 6/4

TRICAD MS®

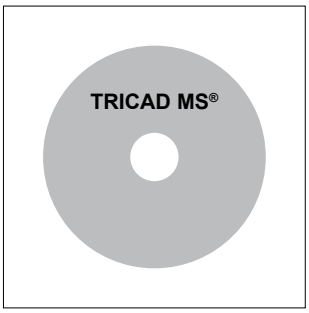

TRICAD MS®

TRICAD MS® overview:

Components selection by list preselection:	By clicking on the desired components, corresponding products are automatically opened and the components are preselected. Then you can select and place them in CAD.
Part list production:	Part lists can be created in the modules. The part list can be generated in ASCII or EXCEL-compatible format.
Summary:	- Intuitive construction of secondary steelworks in combination with common MEFA profile channels and complementary elements. - Situational catalog selection of supports. - Smart addition of necessary connecting elements (masonry, steelworks, etc.) - Automatic generation of part list (ready-to-order). - 100% integration and compatibility in all TRICAD MS® modules.
License:	Access via Venturis TRICAD MS® license.

06

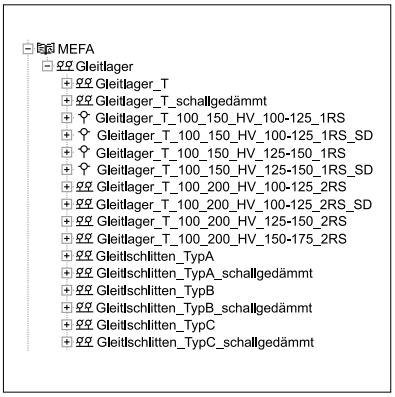

Product selection list

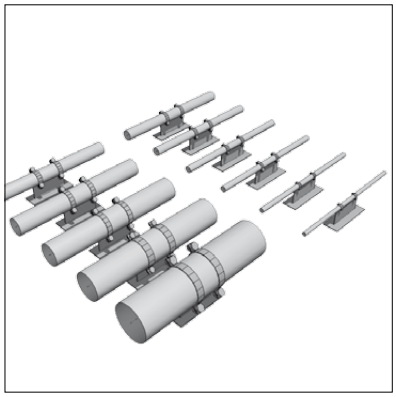

CAD-Component representation
(for example sliding sledge)

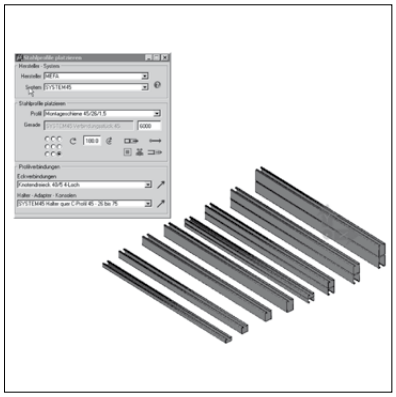

Product selection Profile
(C-profile channels)

Part list

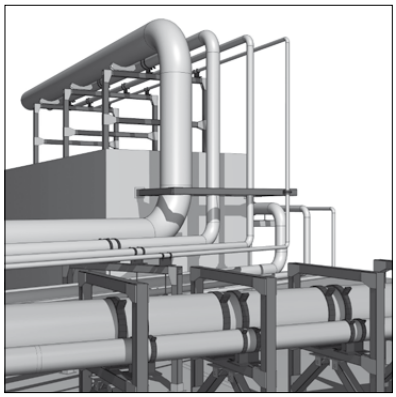

Construction level 3D
(for example CENTUM®)

Photorealistic illustration

MEFA-E3D / pdms 12 till 12.1 for system 45 and CENTUM®

MEFA-E3D

MEFA-E3D overview:

Components selection symbol-surfaces:	A click on selected component symbol will open corresponding E3D-steelwork-selection mask (in CREATE or MODIFY mode) and article group pre selected.
Part list generation:	Part lists can be generated in module E3D-DESIGN, generation in ASCII resp. EXCEL compatible format.
Conjunction MEFA assembly-pipeline:	The menu item CONNECTIONS enable logical connection of support points and support assemblies.
Additional parts in DESIGN:	With the menu item ACCESSORIES additional parts and components, which are not planned separately in the 3D-model, can be set in DESIGN (for example spacer plates etc.) Such additional and components being also catalog referenced, but without 3D graphic.
Draw/Draft:	The Draw/Draft application facilitates automatic drawing of MEFA-based assemblies and all important elements.

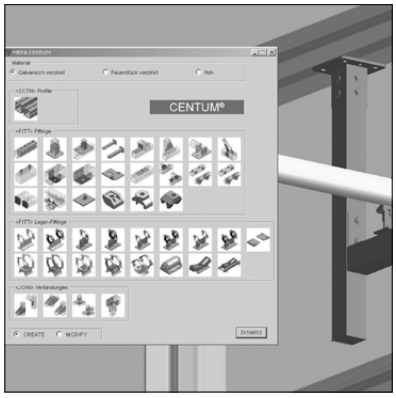

Selection mask CENTUM®

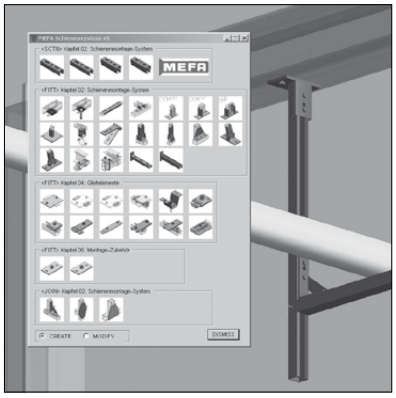

Selection mask rail system 45

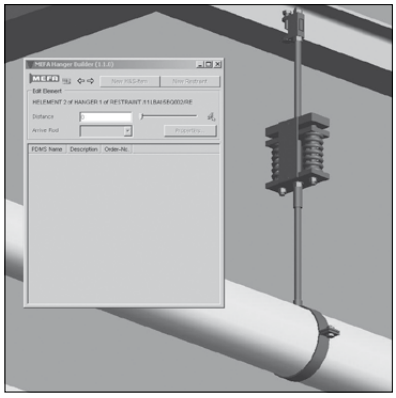

Hanger builder form

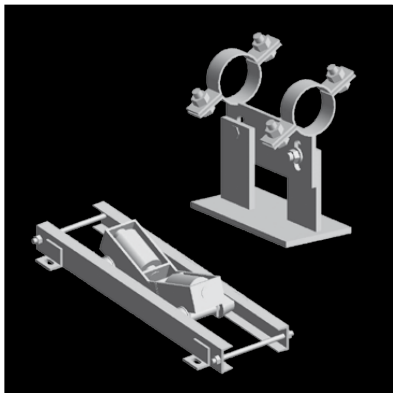

Components view 3D

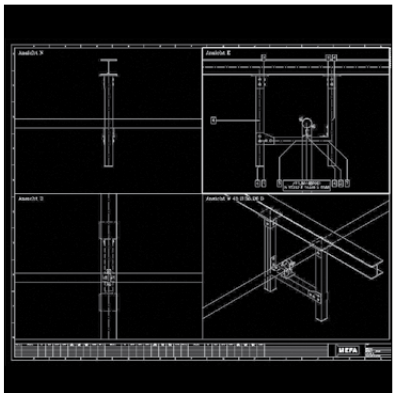

Draw/Draft-application (general view)

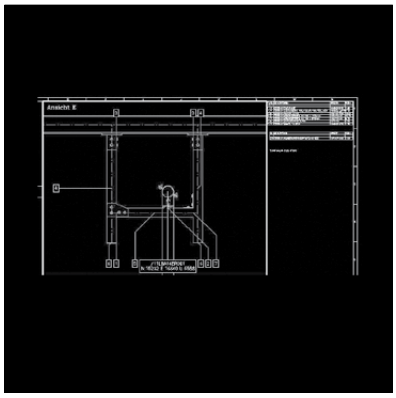

Draw/Draft-application (detail)

MEFA statiCAL

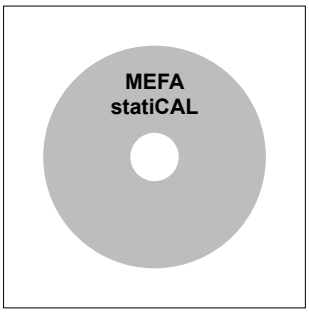

MEFA statiCAL

MEFA statiCAL overview:

Easy to operate, MEFA statiCAL enables you to generate uncomplicated load calculation in combination with MEFA C-profiles and CENTUM. The static report can be taken for documentation.

Static calculation

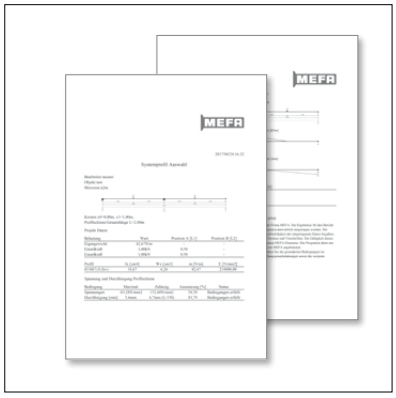

Static report

MEFA ProfiDesigner 3.2

MEFA ProfiDesigner

MEFA ProfiDesigner overview:

For all common CAD-Systems, such as Autocad 2D/3D, Solid Edge, Solid Works, Mechanical Desktop, Mega CAD as well as all CAD-Systems which support DXF, DWG, STEP/STP or SAT data.

Identification	Packing [pc.]	Part-No.
MEFA ProfiDesigner	1	00005182014

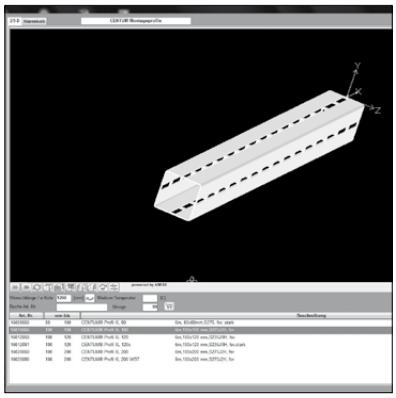

Construction level 3D

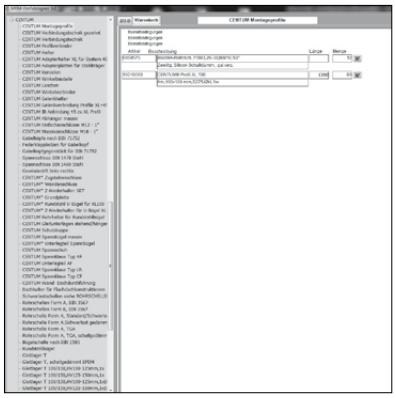

Product selection with part list as PDF or Excel

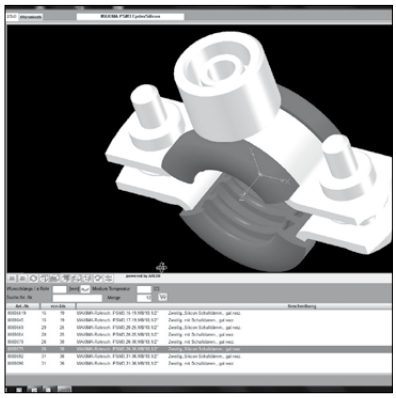

Photorealistic illustration

TSP® - TOP-SURFACE-PROTECTION

High sophisticated surface protection

Mainly steel is used for support structures within the range of fixing systems for pipes or technical building installations. Especially rail systems, pipe clamps and threaded hangers are concerned. To achieve a long-lasting protection against rust for these parts, a sufficient corrosion protection is required. This is the only way how facilities can be operated efficiently and without damages in the long term.

Informations about environmental conditions, humidity, temperature, air pollution (sulphur or chlorides) as well as salt loading are necessary for choosing the right corrosion protection. The service life should be considerd and maybe optical issues becomes important, also.

With **TSP®**, MEFA offers a comprehensive **system of surface protections** for a wide range up to the highest corrosive category **C5**. This means, that support structures can be installed in indoor swimming pools, road tunnels or in the offshore sector without difficulties.

Therefore you can avoide expensive and difficult to obtain **stainless steel constructions** in many applications and use approved fixing systems at once.

The protection systems **TSP®-3** and **TSP®-5** are the core pieces of **TSP®**.

TSP®-3

TSP®-3 is ideal up to corrosive category C3. For many standard parts it is immediately available.

TSP®-5

TSP®-5 is perfectly suitable up to corrosive category C5 I/M. Due to the three-layered structure,TSP-5 achived 5950 hours* in the salt spray test (according to DIN EN ISO 9227).
*Statement of coating supplier

Advantages TSP®-5

- Suitable for the highest **corrosive category C5** (DIN EN ISO 12944)
- **Better protection and durability** for surfaces than hot-dip galvanization or thick coated wet painting
- **Stable** to acids, bases, oils and fuels
- Parts with **hollow spaces** or complex structures can be coated
- **Homogeneous** surface
- **Low energy consumption** during coating process
- **No corrosion creep due** to the excellent adhesion to the steel ground, even if small damages occur

Picture sources: Rainer Sturm / pixelio.de

Picture sources: Katharina Wieland / pixelio.de

MEFA surfaces classified by corrosive categories

According to DIN EN ISO 12944 oder DIN EN ISO 14713

			Corrosive category	Corrosion load
		galvanized, pre-galvanized	C1	minor / very low
		galvanized, pre-galvanized	C2	small / low
Top-Surface-Protection (TSP®)		**TSP®-3** Zinc-Nickel, hot-dip galvanized	**C3**	moderate / medium
		TSP®-5 applicable	**C4**	strong / high
		TSP®-5	**C5-I**	very strong (industry) / very high
		TSP®-5	**C5-M/CX**	very strong (sea) / extreme

Picture sources, pixelio.de: 1. Rainer Sturm / 2. Erich Westendarp / 4. Rainer Sturm / 5. Kurt Michel / 6. Katharina Wieland

Environment inside (example)	Environment outside (example)
heated buildings with neutral atmosphere e.g. offices, stores, schools, hotels	non
unheated buildings, condensate can occur e.g. stocks, gyms	atmosphere with little pollution
production rooms with high humidity and polution e.g. food productions, laundries, breweries, dairies	urban and industrial atmosphere, moderate pollution by sulphur dioxide, coastal areas with little salt load
chemical plants, swimming pools, boathouses over sea	industrial and coastal areas with moderate salt load
buildings or areas with almost constant condensation and with heavy contamination	industrial areas with high humidity and aggressive atmosphere
buildings or areas with almost constant condensation and with heavy contamination	coastal and offshore areas with high salt load

The corrosion of metal surfaces depends amongst others on the following factors:

- Environment (atmosphere, water or earth)
- Concentration of substances favouring corrosion (sulphur or chlorides)
- Temperature (increasing temperature causes higher corrosion)
- Strains during use (e.g. mechanical abrasion)

The overall climate (clime, countryside or industrial areas, urban or coastal area) as well as climatic differences on site (e.g. sunny or shady side respectively weather side, covered or not covered, fluctuating humidity within the interior, local chemical strains) are highly significant for corrosion.

The **DIN EN ISO 12944** specifies the corrosive categories. The environmental conditions are classified into six categories from insignificant to highly respectively extreme.

The DIN EN ISO 12944 encompasses the protection of steel parts against corrosion by coating systems. **DIN EN ISO 14713** the protection by galvanization. Both standards contain almost the same corrosive categories.

DIN EN ISO 12944 / DIN EN ISO 14713

Two standards are the base for finding the right surface protection:

DIN EN ISO 12944 (coating parts) and **DIN EN ISO 14713** (galvanized parts). The following tables provide an overview of the assessment criteria for the period of corrosion protection under defined conditions.

Period of protection until first maintenance

In addition to the corrosive categories, the service life of a steel construction must be considered in order to choose the right surface protection.

Period of protection until first maintenance (DIN EN ISO 12944)		
L	quick	2 to 5 years
M	medium	5 to 15 years
H	long	over 15 years

for coated parts

Period of protection until first maintenance (DIN EN ISO 14713)		
VL	very quick	0 to <2 years
L	quick	2 to <5 years
M	medium	5 to <10 years
H	high	10 to <20 years
VH	very high	≥ 20 years

for galvanized parts

Thickness reduction of zinc layer after the first year of outdoor use

The salt spray test should not be use to evaluate galvanized parts. In case of hot-dip galvanized parts, the zinc corrosion rate per year can be used as a criterion for the corrosive category.

Thickness reduction of steel and zinc after the first year of outdoor use under atmospheric loads - according to DIN EN ISO 14713 / DIN EN ISO 9223		
Corrosive category	**unalloyed steel** (thickness reduction in µm)	**Zinc** (thickness reduction in µm)
C1	≤ 1,3	≤ 0,1
C2	> 1,3 - 25	> 0,1 - 0,7
C3	> 25 - 50	> 0,7 - 2,1
C4	> 50 - 80	> 2,1 - 4,2
C5-I	> 80 - 200	> 4,2 - 8,4
C5-M/CX	> 200 - 700	> 8,4 - 25,0

Always consider, that higher material removal rates can occure due to local environmental influences or sections.

Influence of neutral salt spray test

With the help of corrosion test like the salt spray test you can evaluate which protection systems is usable for a specific corrosive category.

Pressure criteria for coating systems on steel (DIN EN ISO 12944)		
Corrosive category	Influence of neutral salt spray test (according ISO 9227) by hours (h)	
C1	low (L) medium (M) high (H)	
C2	low (L) medium (M) high (H)	
C3	low (L) medium (M) high (H)	120 240 480
C4	low (L) medium (M) high (H)	240 480 720
C5-I	low (L) medium (M) high (H)	480 720 1440
C5-M/CX	low (L) medium (M) high (H)	480 720 1440

It should be considered, that the results of a simulated corrosion test, like the salt spray test, show a simulated corrosion load. And this load has not necessarily the same effect than a outdoor weathering.

A lot of factors have an effect on corrosion. And it is not possible to integrate all these factors into laboratory tests. So they can only be an aid for choosing the right protection system.

The results of these rapid corrosion tests (e.g. Kesternich-Test or salt spray test) should not be used to forecast the long term corrosion resistance for hot-dip galvanized parts. The permanent moisturisation, for example, prohibits the build-up of a passive protective layer.

Certificate for ISO 9001:2008

Certificate

Standard **ISO 9001:2015**

Certificate Registr. No. **01 100 090728**

Certificate Holder: **MEFA Befestigungs-und Montagesysteme GmbH**
Schillerstr. 15
74635 Kupferzell
Germany

Scope: Design, engineering, manufacturing and distribution of pipe supports, fixing systems, renewable energy sources for heat pumps and customized solutions

Proof has been furnished by means of an audit that the requirements of ISO 9001:2015 are met.

Validity: The certificate is valid from 2018-09-11 until 2021-09-10.
First certification 2009

2018-09-25

TÜV Rheinland Cert GmbH
Am Grauen Stein · 51105 Köln

www.tuv.com

IAF

DAkkS Deutsche Akkreditierungsstelle D-ZM-16031-01-00

TÜVRheinland®
Precisely Right.

® TÜV, TUEV and TUV are registered trademarks. Utilisation and application requires prior approval.

Certificate for RAL-GZ 655 (exemplary for CENTUM® profile)

VERLEIHUNGSURKUNDE

AWARD CERTIFICATE

Die Gütegemeinschaft Rohrbefestigung e.V. verleiht hiermit aufgrund des ihrem Güteausschuss vorliegenden Prüfberichts der Firma

Based upon the test report of the following company which has been released by their quality commission the quality assurance association Gütegemeinschaft Rohrbefestigung e.V. hereby awards the company

MEFA Befestigungs- und Montagesysteme GmbH

für das Produkt
Montageschiene

for the product
pipe support channel / strut

CENTUM® Profil XL

das vom RAL Deutsches Institut für Gütesicherung und Kennzeichnung e.V., St. Augustin, anerkannte und durch Eintragung beim Deutschen Patent- und Markenamt als Kollektivmarke geschützte

the RAL quality label „Gütezeichen Rohrbefestigung" which is recognised by RAL (Deutsches Institut für Gütesicherung und Kennzeichnung e.V.) and is protected as collective mark by registration with the German Patent and Trademark Office

„Gütezeichen Rohrbefestigung"

RAL GÜTEZEICHEN ROHRBEFESTIGUNG

in Verbindung mit dem produktbezogenen Hinweis

to be used in combination with the marking

RAL-GZ 655-C „Montageschienen / pipe support channel/strut"

Landsberg am Lech, den 27.01.2017

Gütegemeinschaft Rohrbefestigung e.V.

Der Geschäftsführer
Managing Director

2012-01a

Certificate of conformity of the factory production control

Certificate of Conformity
of the Factory Production Control

No. 0780-CPR-163413

In compliance with *Regulation (EU) No 305/2011 of the European Parliament and of the Council of 9 March 2011* (the Construction Products Regulation - CPR), this certificate applies to the construction products

Structural components of steel acc. EN 1090-2 / of aluminium acc. EN 1090-3

Designation of products	Execution class	Declaration method
Welded, not welded and screwed steel components and assembly sets for steel structures with or without corrosion protection Not welded and screwed aluminium components and assembly sets for aluminium structures with or without corrosion protection	EXC 1 and EXC 2	Method 1 or 2 or 3a or 3b

produced by

MEFA Befestigungs- und Montagesysteme GmbH
Schillerstraße 15
74635 Kupferzell

and produced in the manufacturing plant

Manufacturing plant 1 and Manufacturing plant 2

This certificate attests that all provisions concerning the assessment and verification of constancy of performance described in Annex ZA of the harmonised standard

EN 1090-1:2009 + A1:2011

under system 2+ are applied and that

the factory production control (FPC) fulfils all the prescribed requirements.

This certificate was first issued on 2016-08-17 and will remain valid as long as the test methods and/or factory production control requirements included in the harmonised standard, used to assess the performance of the declared essential characteristics, do not change, and the construction products, and the manufacturing conditions in the plant are not modified significantly, lasted until 2021-08-17 unless suspended or withdrawn by the FPC certification body.

Nuremberg, 2016-08-17

TÜV Rheinland LGA Bautechnik GmbH
Tillystraße 2 • 90431 Nürnberg • Germany
Notified FPC Certification Body 0780

www.tuv.com

2016_Z_163413E.docx // Seite 1 von 1

Dr. rer. nat. Rosina Miess
Deputy Head of Certification Body

TÜVRheinland®
LGA
Genau. Richtig.

10/2004 6.08 ® TÜV, TÜEV und TUV sind eingetragene Marken. Eine Nutzung und Verwendung bedarf der vorherigen Zustimmung

Welding Certificate DIN 1090

Welding Certificate

Nr. 163413-e

In accordance with DIN EN 1090-1:2010-07 for the execution of welding works for structural steel components in the execution classes1 to 2

Manufacturer	**MEFA Befestigungs- und Montagesysteme GmbH** Kubacher Straße 2 74635 Kupferzell Germany
Techn. Specification	DIN EN 1090-2:2011-10
Execution classes	EXC 1 to EXC 2 acc. to EN 1090-2
Welding process(es)	21 – resistance spot welding 135 – Metal active gas welding (MAG)
Basic material(s)	S235, S275, S355 acc. standards mentioned in EN 1090-2, table 2 + 3;
Responsible Welding supervisor	Mr. Peter Butz, born: December 09th, 1962 International Welding Specialist SFM/EWS/IWS
Deputy Welding supervisor	not applicable
Assistance Welding supervisor:	not applicable
Next inspection	III. quarter 2019
Verification	The Manufaturer and handler of the type "welding of steel structure components" has proofed conformity acc. the inspection authority that he possesses the required qualified employees and equipment.
Remarks	The above mentioned welding processes only may be carried out by qualified welders acc. to EN 1090-2 item 7.4.2 and with qualified welding procedures acc. to table 12.

Nuremberg, April 23rd, 2018

TÜV Rheinland LGA Bautechnik GmbH
Tillystraße 2 • 90431 Nuremberg

Dipl.-Ing. (FH) Franz Lorenz
Deputy Head of inspection body BAY02

www.tuv.com

2017_SZ-e_163413_84640582 MEFA.doc // Seite 1 von 1

TÜVRheinland®
LGA
Genau. Richtig.

10X206 6.08 © TÜV, TUEV und TUV sind eingetragene Marken. Eine Nutzung und Verwendung bedarf der vorherigen Zustimmung